CATALOGUE 2012

DC FAN

Protechnic Electric Co.,Ltd

Index

Description Of Model Number

MG T 92 12 Z B - R 25

Magic

G:Axial Fan

B:Blower

Elesctric characteristic

A:Standard 2pin

T:Frequency generation 3pin or more

FAN dimension:

25:25*25mm
30:30*30mm
38:38*38mm
40:40*40mm
45:45*45mm
50:50*50mm
60:60*60mm
70:70*70mm
80:80*80mm
92:92*92mm
120:120*120mm
135:135*135mm
17:172*150mm
17:∅175mm

Voltage:

05:5V DC
12:12V DC
24:24V DC
48:48V DC

Speed:

P: high speed
W:
V:
U:
Z:
Y:
X:
H:
M:
L: Low speed

Bearing type:

F:Fluid dynamic bearing
B:Dual ball bearings
R:Rifle bearing
S:Sleeve bearing

Function:

A:Non auto restart
O:Automatic restart&locked current protection
R:Rotate detection&automatic restart&locked current protection
W:Pulse width modulation&automatic restart&locked current protection(PWM)

Thickness:

76:76mm
69:69mm
56:56mm
51:51mm
38:38mm
32:32mm
28:28mm
25:25mm
20:20mm
15:15mm
10:10mm
08:8mm

25x25x08mm series

Bearing Type	☐ 2 Ball	☑ Sleeve	☐ Rifle	☑ FDB
Speed Control	☑ Voltage	☐ Temperature	☐ PWM	
	☐ ±5% Speed tolerance		☑ ±15% Speed tolerance	
Frame Type	☑ 4 Screw	☐ 8 Screw		
Signal output	☑ Alarm Signal	☑ Tacho Signal		
Protection	☑ Lock	☑ Reverse	☐ Over Voltage	☐ Over heat
ESD ①	☐ Class Ⅰ	☑ Class Ⅱ	☐ Class Ⅲ	
Insulation ②	☑ Class A	☐ Class B	☐ Class C	☐ Class F
Safety	☑ UL	☑ TUV	☑ CE	☐ VDE
Motor type	☑ Uni-phase	☐ 2 phase	☐ 3 phase	

AIR FLOW/STATIC-PRESSURE

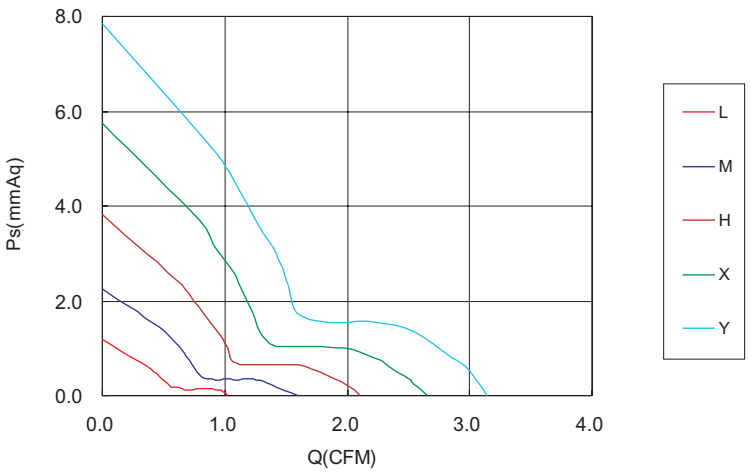

OUTLINE(mm)

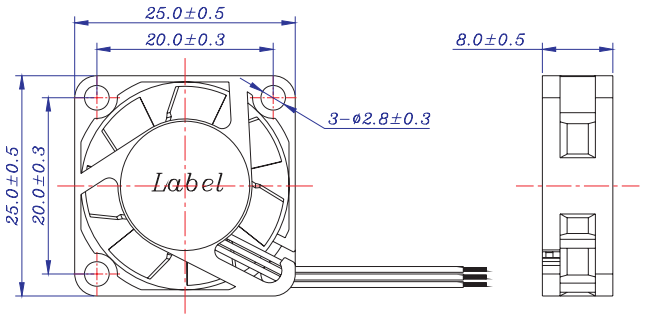

Note:

①-Reference standard: IEC 61000-4-2

②-Reference standard: UL 1446

Item No.	Operating Voltage	Maximum Air Flow		Maximum Air Pressure		Speed	Rated Current	Input Power	Noise	Weight
	(V)	(CMM)	(CFM)	(mmAq)	(inchAq)	(rpm)	(A)	(W)	dB(A)	(g)
MG(1)2505LF-(2)08	5	0.029	1.02	1.18	0.046	5,000	0.07	0.35	10.5	5
MG(1)2505MF-(2)08	5	0.045	1.60	2.26	0.102	7,000	0.10	0.48	17.5	5
MG(1)2505HF-(2)08	5	0.060	2.11	3.83	0.151	9,000	0.17	0.83	22.6	5
MG(1)2505XF-(2)08	5	0.075	2.66	5.75	0.226	11,000	0.21	1.05	29.2	5
MG(1)2505LS-(2)08	5	0.029	1.02	1.18	0.046	5,000	0.07	0.35	10.5	5
MG(1)2505MS-(2)08	5	0.045	1.60	2.26	0.102	7,000	0.10	0.48	17.5	5
MG(1)2505HS-(2)08	5	0.060	2.11	3.83	0.151	9,000	0.17	0.83	22.6	5
MG(1)2512MF-(2)08	12	0.045	1.60	2.26	0.102	7,000	0.07	0.78	17.5	5
MG(1)2512HF-(2)08	12	0.060	2.11	3.83	0.151	9,000	0.08	0.96	22.6	5
MG(1)2512XF-(2)08	12	0.075	2.66	5.75	0.226	11,000	0.13	1.56	29.2	5
MG(1)2512MS-(2)08	12	0.045	1.60	2.26	0.102	7,000	0.07	0.78	17.5	5
MG(1)2512HS-(2)08	12	0.060	2.11	3.83	0.151	9,000	0.08	0.96	22.6	5

Remarks:

(1)-Electric Characteristics:

A: Standard 2-Pin; **T**: Frequency Generation 3-Pin or more.

(2)-Function:

O: Automatic Restart & Locked Current Protection;

R: Rotate Detection Automatic Restart & Locked Current Protection;

S: Thermo-Control Speed, Automatic Restart & Locked Current Protection;

W: Pulse Width Modulation & Automatic Restart & Locked Current Protection (PWM).

The spec is for reference only, it's subject to change without any prior notice

25x25x10mm series

Bearing Type	☑ 2 Ball	☑ Sleeve	☐ Rifle	☑ FDB
Speed Control	☑ Voltage	☐ Temperature	☐ PWM	
	☐ ±5% Speed tolerance		☑ ±15% Speed tolerance	
Frame Type	☑ 4 Screw	☐ 8 Screw		
Signal output	☑ Alarm Signal	☑ Tacho Signal		
Protection	☑ Lock	☑ Reverse	☐ Over Voltage	☐ Over heat
ESD ①	☐ Class Ⅰ	☐ Class Ⅱ	☑ Class Ⅲ	
Insulation ②	☑ Class A	☐ Class B	☐ Class C	☐ Class F
Safety	☑ UL	☑ TUV	☑ CE	☐ VDE
Motor type	☑ Uni-phase	☐ 2 phase	☐ 3 phase	

AIR FLOW/STATIC-PRESSURE

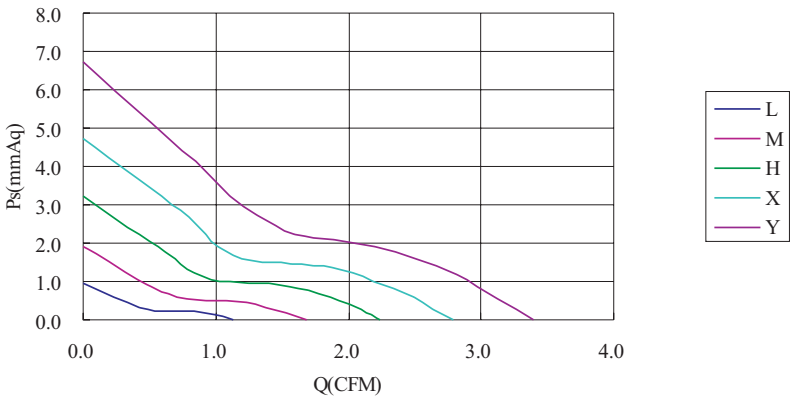

OUTLINE(mm)

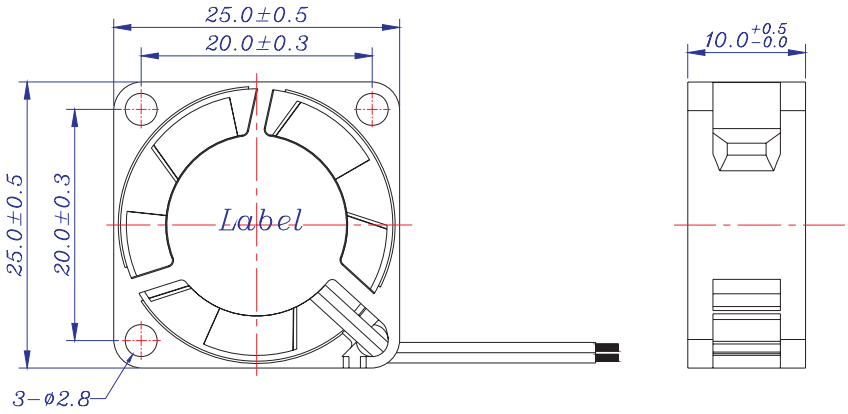

Note:

①-Reference standard: IEC 61000-4-2

②-Reference standard: UL 1446

Item No.	Operating Voltage	Maximum Air Flow		Maximum Air Pressure		Speed	Rated Current	Input Power	Noise	Weight
	(V)	(CMM)	(CFM)	(mmAq)	(inchAq)	(rpm)	(A)	(W)	dB(A)	(g)
MG(1)2505LS-(2)10	5	0.032	1.13	0.97	0.038	5,000	0.05	0.25	8.1	6
MG(1)2505MS-(2)10	5	0.048	1.68	1.91	0.075	7,000	0.08	0.40	13.5	6
MG(1)2505HS-(2)10	5	0.063	2.24	3.25	0.128	9,000	0.12	0.60	18.7	6
MG(1)2505LF-(2)10	5	0.032	1.13	0.97	0.038	5,000	0.05	0.25	8.1	6
MG(1)2505MF-(2)10	5	0.048	1.68	1.91	0.075	7,000	0.08	0.40	13.5	6
MG(1)2505HF-(2)10	5	0.063	2.24	3.25	0.128	9,000	0.12	0.60	18.7	6
MG(1)2505XF-(2)10	5	0.079	2.79	4.73	0.186	11,000	0.15	0.75	25.3	6
MG(1)2505LB-(2)10	5	0.032	1.13	0.97	0.038	5,000	0.05	0.25	8.1	6
MG(1)2505MB-(2)10	5	0.048	1.68	1.91	0.075	7,000	0.08	0.40	13.5	6
MG(1)2505HB-(2)10	5	0.063	2.24	3.25	0.128	9,000	0.12	0.60	18.7	6
MG(1)2505XB-(2)10	5	0.079	2.79	4.73	0.186	11,000	0.15	0.75	25.3	6
MG(1)2505YB-(2)10	5	0.096	3.39	6.71	0.264	13,000	0.18	0.90	30.0	6
MG(1)2512LS-(2)10	12	0.032	1.13	0.97	0.038	5,000	0.04	0.48	8.1	6
MG(1)2512MS-(2)10	12	0.048	1.68	1.91	0.075	7,000	0.05	0.60	13.5	6
MG(1)2512HS-(2)10	12	0.063	2.24	3.25	0.128	9,000	0.07	0.84	20.1	6
MG(1)2512LF-(2)10	12	0.032	1.13	0.97	0.038	5,000	0.04	0.48	8.1	6
MG(1)2512MF-(2)10	12	0.048	1.68	1.91	0.075	7,000	0.05	0.60	13.5	6
MG(1)2512HF-(2)10	12	0.063	2.24	3.25	0.128	9,000	0.07	0.84	20.1	6
MG(1)2512XF-(2)10	12	0.079	2.79	4.73	0.186	11,000	0.08	0.96	25.3	6
MG(1)2512LB-(2)10	12	0.032	1.13	0.97	0.038	5,000	0.04	0.48	8.1	6
MG(1)2512MB-(2)10	12	0.048	1.68	1.91	0.075	7,000	0.05	0.60	13.5	6
MG(1)2512HB-(2)10	12	0.063	2.24	3.25	0.128	9,000	0.07	0.84	18.7	6
MG(1)2512XB-(2)10	12	0.079	2.79	4.73	0.186	11,000	0.08	0.96	25.3	6
MG(1)2512YB-(2)10	12	0.096	3.39	6.71	0.264	13,000	0.13	1.56	30.0	6

Remarks:

(1)-Electric Characteristics:

A: Standard 2-Pin; **T**: Frequency Generation 3-Pin or more.

(2)-Function:

O: Automatic Restart & Locked Current Protection;

R: Rotate Detection Automatic Restart & Locked Current Protection;

S: Thermo-Control Speed, Automatic Restart & Locked Current Protection;

W: Pulse Width Modulation & Automatic Restart & Locked Current Protection (PWM).

The spec is for reference only, it's subject to change without any prior notice

30x30x10mm series B

Bearing Type	☑ 2 Ball	☑ Sleeve	☐ Rifle	☑ FDB
Speed Control	☑ Voltage	☐ Temperature	☐ PWM	
	☐ ±5% Speed tolerance		☑ ±15% Speed tolerance	
Frame Type	☑ 4 Screw	☐ 8 Screw		
Signal output	☑ Alarm Signal	☑ Tacho Signal		
Protection	☑ Lock	☑ Reverse	☐ Over Voltage	☐ Over heat
ESD ①	☐ Class Ⅰ	☐ Class Ⅱ	☑ Class Ⅲ	
Insulation ②	☑ Class A	☐ Class B	☐ Class C	☐ Class F
Safety	☑ UL	☑ TUV	☑ CE	☐ VDE
Motor type	☑ Uni-phase	☐ 2 phase	☐ 3 phase	

AIR FLOW/STATIC-PRESSURE

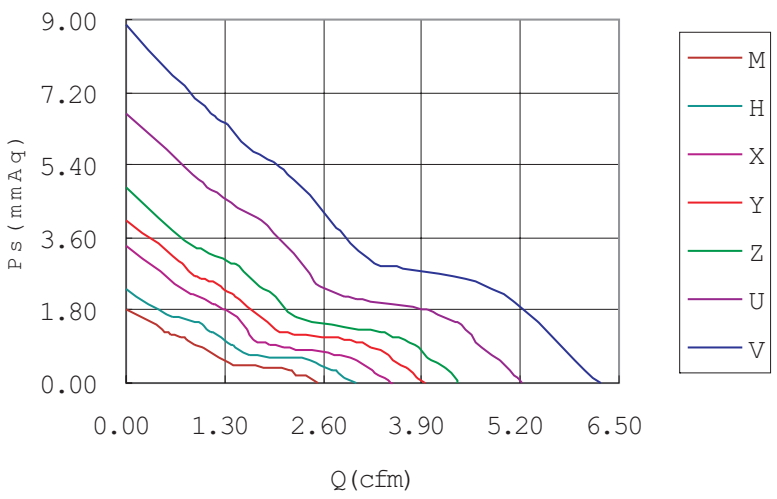

OUTLINE(mm)

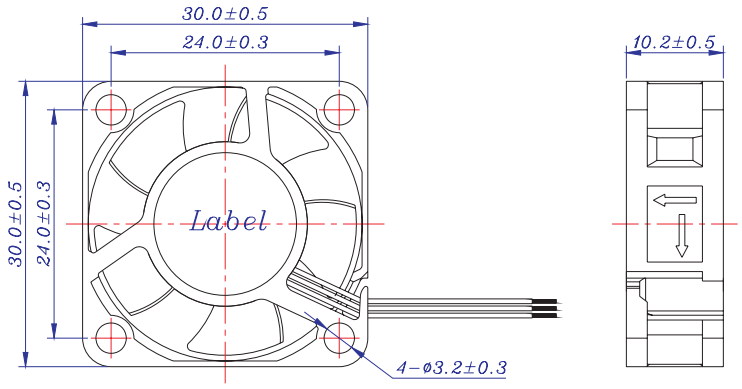

Note:

①-Reference standard: IEC 61000-4-2

②-Reference standard: UL 1446

Item No.	Operating Voltage	Maximum Air Flow		Maximum Air Pressure		Speed	Rated Current	Input Power	Noise	Weight
	(V)	(CMM)	(CFM)	(mmAq)	(inchAq)	(rpm)	(A)	(W)	dB(A)	(g)
MG(1)3005MF-(2)10	5	0.072	2.54	1.85	0.073	6,000	0.07	0.35	12.9	8
MG(1)3005HF-(2)10	5	0.086	3.05	2.34	0.092	7,000	0.09	0.45	19.8	8
MG(1)3005XF-(2)10	5	0.099	3.51	3.37	0.133	8,000	0.11	0.55	20.8	8
MG(1)3005YF-(2)10	5	0.112	3.95	4.05	0.159	9,000	0.14	0.70	26.3	8
MG(1)3005ZF-(2)10	5	0.124	4.37	4.83	0.190	10,000	0.20	1.00	30.0	8
MG(1)3005MB-(2)10	5	0.072	2.54	1.85	0.073	6,000	0.07	0.35	12.9	8
MG(1)3005HB-(2)10	5	0.086	3.05	2.34	0.092	7,000	0.09	0.45	19.8	8
MG(1)3005XB-(2)10	5	0.099	3.51	3.37	0.133	8,000	0.11	0.55	20.8	8
MG(1)3005YB-(2)10	5	0.112	3.95	4.05	0.159	9,000	0.14	0.70	26.3	8
MG(1)3005ZB-(2)10	5	0.124	4.37	4.83	0.190	10,000	0.20	1.00	30.0	8
MG(1)3005UB-(2)10	5	0.147	5.22	6.64	0.261	12,000	0.33	1.65	32.7	8
MG(1)3005MS-(2)10	5	0.072	2.54	1.85	0.073	6,000	0.07	0.35	12.9	8
MG(1)3005HS-(2)10	5	0.086	3.05	2.34	0.092	7,000	0.09	0.45	19.8	8
MG(1)3005XS-(2)10	5	0.099	3.51	3.37	0.133	8,000	0.11	0.55	20.8	8
MG(1)3005YS-(2)10	5	0.112	3.95	4.05	0.159	9,000	0.14	0.70	26.3	8
MG(1)3012XF-(2)10	12	0.099	3.51	3.37	0.133	8,000	0.06	0.72	20.8	8
MG(1)3012YF-(2)10	12	0.112	3.95	4.05	0.159	9,000	0.07	0.84	26.3	8
MG(1)3012ZF-(2)10	12	0.124	4.37	4.83	0.190	10,000	0.10	1.20	30.0	8
MG(1)3012XB-(2)10	12	0.099	3.51	3.37	0.133	8,000	0.06	0.72	20.8	8
MG(1)3012YB-(2)10	12	0.112	3.95	4.05	0.159	9,000	0.07	0.84	26.3	8
MG(1)3012ZB-(2)10	12	0.124	4.37	4.83	0.190	10,000	0.10	1.20	30.0	8
MG(1)3012UB-(2)10	12	0.147	5.22	6.64	0.261	12,000	0.12	1.44	32.7	8
MG(1)3012VB-(2)10	12	0.177	6.25	8.85	0.348	14,000	0.15	1.80	38.8	8
MG(1)3012XS-(2)10	12	0.099	3.51	3.37	0.133	8,000	0.06	0.72	20.8	8
MG(1)3012YS-(2)10	12	0.112	3.95	4.05	0.159	9,000	0.07	0.84	26.3	8

Remarks:

(1)-Electric Characteristics:

A: Standard 2-Pin; **T**: Frequency Generation 3-Pin or more.

(2)-Function:

O: Automatic Restart & Locked Current Protection;

R: Rotate Detection Automatic Restart & Locked Current Protection;

S: Thermo-Control Speed, Automatic Restart & Locked Current Protection;

W: Pulse Width Modulation & Automatic Restart & Locked Current Protection (PWM).

The spec is for reference only, it's subject to change without any prior notice

36x36x28mm series

Bearing Type	☑ 2 Ball	☐ Sleeve	☐ Rifle	☐ FDB
Speed Control	☑ Voltage	☐ Temperature	☑ PWM	
	☐ ±5% Speed tolerance		☑ ±10% Speed tolerance	
Frame Type	☑ 4 Screw	☐ 8 Screw		
Signal output	☑ Alarm Signal	☑ Tacho Signal		
Protection	☑ Lock	☑ Reverse	☐ Over Voltage	☐ Over heat
ESD ①	☐ Class Ⅰ	☐ Class Ⅱ	☑ Class Ⅲ	
Insulation ②	☑ Class A	☐ Class B	☐ Class C	☐ Class F
Safety	☑ UL	☑ TUV	☑ CE	☐ VDE
Motor type	☑ Uni-phase	☐ 2 phase	☐ 3 phase	

AIR FLOW/STATIC-PRESSURE

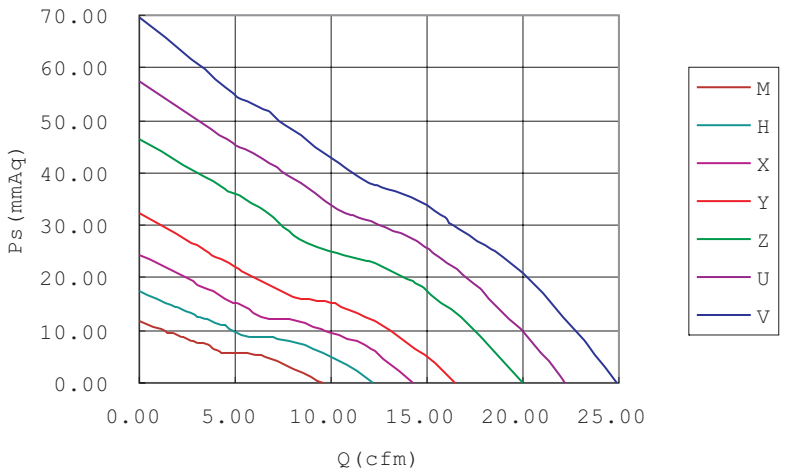

OUTLINE(mm)

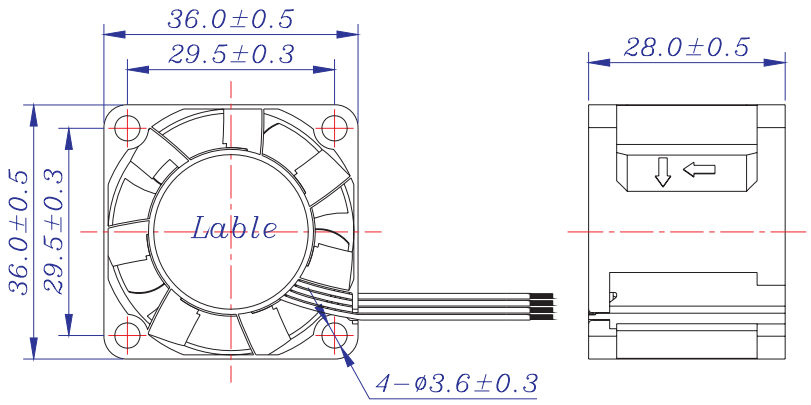

Note:

①-Reference standard: IEC 61000-4-2

②-Reference standard: UL 1446

Item No.	Operating Voltage	Maximum Air Flow		Maximum Air Pressure		Speed	Rated Current	Input Power	Noise	Weight
	(V)	(CMM)	(CFM)	(mmAq)	(inchAq)	(rpm)	(A)	(W)	dB(A)	(g)
MG(1)3612MB-(2)28	12	0.271	9.55	11.84	0.466	9,000	0.15	1.80	39.8	42
MG(1)3612HB-(2)28	12	0.345	12.18	17.40	0.685	11,000	0.20	2.40	45.6	42
MG(1)3612XB-(2)28	12	0.403	14.22	24.40	0.961	13,000	0.30	3.60	49.3	42
MG(1)3612YB-(2)28	12	0.467	16.48	32.20	1.268	15,000	0.40	4.80	53.2	42
MG(1)3612ZB-(2)28	12	0.567	20.03	46.60	1.835	18,000	0.60	7.20	58.8	42
MG(1)3612UB-(2)28	12	0.629	22.20	57.40	2.260	20,000	0.90	10.80	61.8	42
MG(1)3612VB-(2)28	12	0.705	24.88	69.50	2.736	22,000	1.20	14.40	63.2	42
MG(1)3624MB-(2)28	24	0.271	9.55	11.84	0.466	9,000	0.11	2.64	39.8	42
MG(1)3624HB-(2)28	24	0.345	12.18	17.40	0.685	11,000	0.16	3.84	45.6	42
MG(1)3624XB-(2)28	24	0.403	14.22	24.40	0.961	13,000	0.25	6.00	49.3	42

Remarks:

(1)-Electric Characteristics:

A: Standard 2-Pin; **T**: Frequency Generation 3-Pin or more.

(2)-Function:

A: None Automatic Restart;
O: Automatic Restart & Locked Current Protection;
R: Rotate Detection Automatic Restart & Locked Current Protection;
S: Thermo-Control Speed, Automatic Restart & Locked Current Protection;
W: Pulse Width Modulation & Automatic Restart & Locked Current Protection (PWM).

The spec is for reference only, it's subject to change without any prior notice

38x38x20mm series B

Bearing Type	☑ 2 Ball	☐ Sleeve	☐ Rifle	☐ FDB
Speed Control	☑ Voltage	☐ Temperature	☑ PWM	
	☐ ±5% Speed tolerance		☑ ±10% Speed tolerance	
Frame Type	☑ 4 Screw	☐ 8 Screw		
Signal output	☑ Alarm Signal	☑ Tacho Signal		
Protection	☑ Lock	☑ Reverse	☐ Over Voltage	☐ Over heat
ESD ①	☐ Class Ⅰ	☐ Class Ⅱ	☑ Class Ⅲ	
Insulation ②	☑ Class A	☐ Class B	☐ Class C	☐ Class F
Safety	☑ UL	☑ TUV	☑ CE	☐ VDE
Motor type	☑ Uni-phase	☐ 2 phase	☐ 3 phase	

AIR FLOW/STATIC-PRESSURE

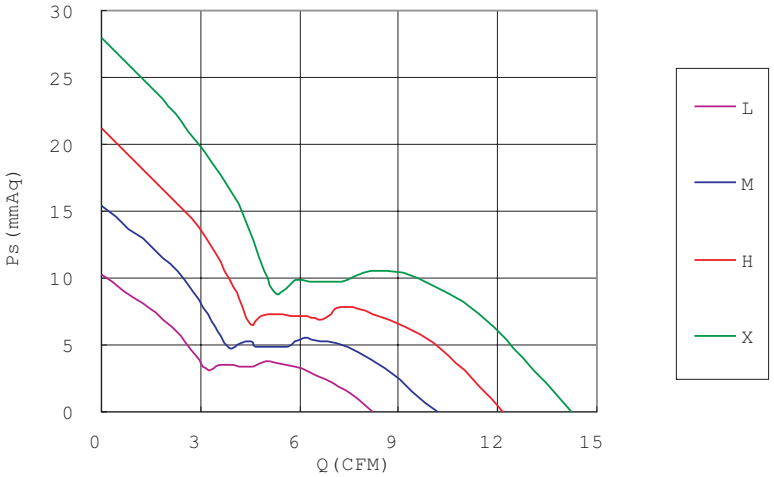

OUTLINE(mm)

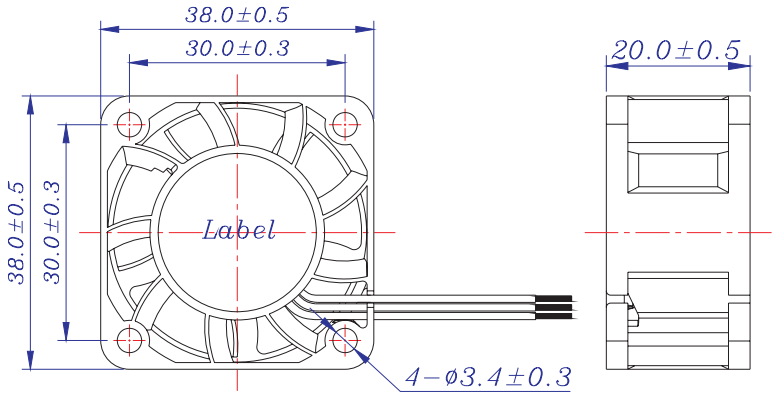

Note:

①-Reference standard: IEC 61000-4-2

②-Reference standard: UL 1446

Item No.	Operating Voltage	Maximum Air Flow		Maximum Air Pressure		Speed	Rated Current	Input Power	Noise	Weight
	(V)	(CMM)	(CFM)	(mmAq)	(inchAq)	(rpm)	(A)	(W)	dB(A)	(g)
MG(1)3812LB-(2)20	12	0.233	8.22	10.29	0.405	9,000	0.16	1.92	38.2	35
MG(1)3812MB-(2)20	12	0.288	10.17	15.45	0.608	11,000	0.22	2.64	43.3	35
MG(1)3812HB-(2)20	12	0.345	12.17	21.20	0.835	13,000	0.30	3.60	47.0	35
MG(1)3812XB-(2)20	12	0.403	14.21	28.00	1.102	15,000	0.40	4.80	50.5	35
MG(1)3824LB-(2)20	24	0.233	8.22	10.29	0.405	9,000	0.10	2.40	38.2	35
MG(1)3824MB-(2)20	24	0.288	10.17	15.45	0.608	11,000	0.15	3.60	43.3	35
MG(1)3824HB-(2)20	24	0.345	12.17	21.20	0.835	13,000	0.22	5.28	47.0	35
MG(1)3824XB-(2)20	24	0.403	14.21	28.00	1.102	15,000	0.33	7.92	50.5	35

Remarks:

(1)-Electric Characteristics:

A: Standard 2-Pin; **T**: Frequency Generation 3-Pin or more.

(2)-Function:

A: None Automatic Restart;
O: Automatic Restart & Locked Current Protection;
R: Rotate Detection Automatic Restart & Locked Current Protection;
S: Thermo-Control Speed, Automatic Restart & Locked Current Protection;
W: Pulse Width Modulation & Automatic Restart & Locked Current Protection (PWM).

The spec is for reference only, it's subject to change without any prior notice

38x38x28mm series B

Bearing Type	☑ 2 Ball	☐ Sleeve	☐ Rifle	☐ FDB
Speed Control	☑ Voltage	☐ Temperature	☑ PWM	
	☐ ±5% Speed tolerance		☑ ±10% Speed tolerance	
Frame Type	☑ 4 Screw	☐ 8 Screw		
Signal output	☑ Alarm Signal	☑ Tacho Signal		
Protection	☑ Lock	☑ Reverse	☐ Over Voltage	☐ Over heat
ESD ①	☐ Class Ⅰ	☐ Class Ⅱ	☑ Class Ⅲ	
Insulation ②	☑ Class A	☐ Class B	☐ Class C	☐ Class F
Safety	☑ UL	☑ TUV	☑ CE	☐ VDE
Motor type	☑ Uni-phase	☐ 2 phase	☐ 3 phase	

AIR FLOW/STATIC-PRESSURE

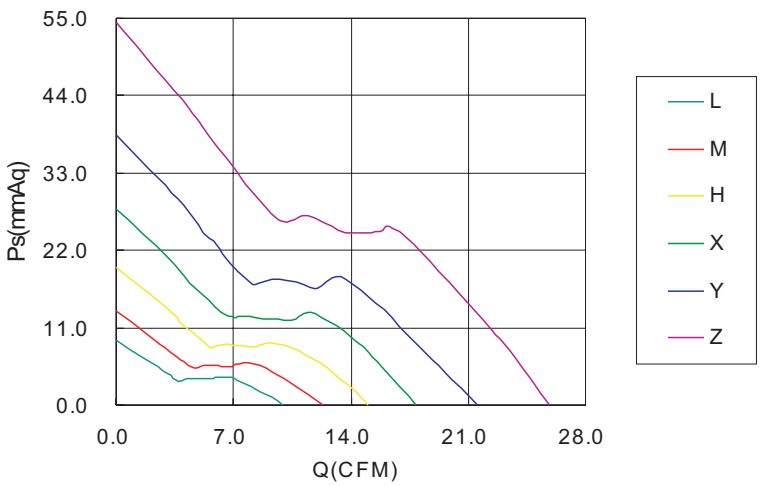

OUTLINE(mm)

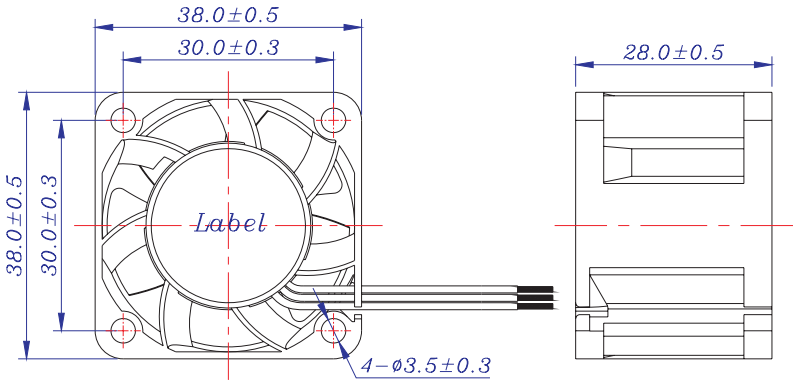

Note:

①-Reference standard: IEC 61000-4-2

②-Reference standard: UL 1446

Item No.	Operating Voltage	Maximum Air Flow		Maximum Air Pressure		Speed	Rated Current	Input Power	Noise	Weight
	(V)	(CMM)	(CFM)	(mmAq)	(inchAq)	(rpm)	(A)	(W)	dB(A)	(g)
MG(1)3812LB-(2)28	12	0.281	9.91	9.14	0.360	7,500	0.16	1.92	40.4	43
MG(1) 3812MB-(2)28	12	0.351	12.38	13.32	0.524	9,000	0.20	2.40	45.9	43
MG(1) 3812HB-(2)28	12	0.426	15.05	19.50	0.768	11,000	0.28	3.36	50.0	43
MG(1) 3812XB-(2)28	12	0.507	17.91	27.90	1.098	13,000	0.50	6.00	55.1	43
MG(1)3812YB-(2)28	12	0.611	21.56	38.50	1.516	15,000	0.60	7.20	58.4	43
MG(1)3812ZB-(2)28	12	0.731	25.82	54.50	2.146	18,000	1.00	12.00	63.5	43
MG(1)3824LB-(2)28	24	0.281	9.91	9.14	0.360	7,500	0.11	2.64	40.4	43
MG(1)3824MB-(2)28	24	0.351	12.38	13.32	0.524	9,000	0.15	3.60	45.9	43
MG(1)3824HB-(2)28	24	0.426	15.05	19.50	0.768	11,000	0.18	4.32	50.0	43
MG(1)3824XB-(2)28	24	0.507	17.91	27.90	1.098	13,000	0.25	6.00	55.1	43

Remarks:

(1)-Electric Characteristics:

A: Standard 2-Pin; **T**: Frequency Generation 3-Pin or more.

(2)-Function:

O: Automatic Restart & Locked Current Protection;

R: Rotate Detection Automatic Restart & Locked Current Protection;

S: Thermo-Control Speed, Automatic Restart & Locked Current Protection;

W: Pulse Width Modulation & Automatic Restart & Locked Current Protection (PWM).

The spec is for reference only, it's subject to change without any prior notice

38x38x28mm series C

Bearing Type	☑ 2 Ball	☐ Sleeve	☐ Rifle	☐ FDB
Speed Control	☑ Voltage	☐ Temperature	☑ PWM	
	☐ ±5% Speed tolerance		☑ ±10% Speed tolerance	
Frame Type	☑ 4 Screw	☐ 8 Screw		
Signal output	☑ Alarm Signal	☑ Tacho Signal		
Protection	☑ Lock	☑ Reverse	☐ Over Voltage	☐ Over heat
ESD ①	☐ Class Ⅰ	☐ Class Ⅱ	☑ Class Ⅲ	
Insulation ②	☑ Class A	☐ Class B	☐ Class C	☐ Class F
Safety	☑ UL	☑ TUV	☑ CE	☐ VDE
Motor type	☑ Uni-phase	☐ 2 phase	☐ 3 phase	

AIR FLOW/STATIC-PRESSURE

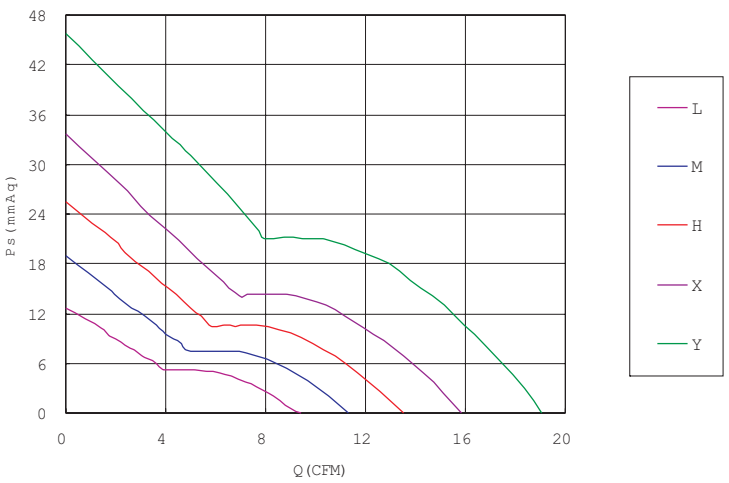

OUTLINE(mm)

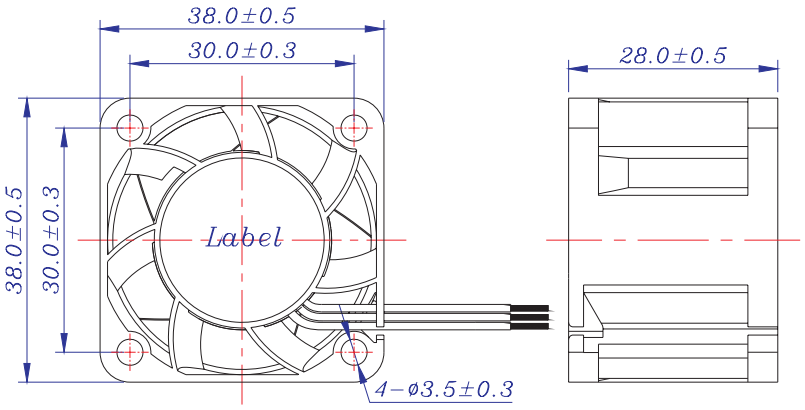

Note:

①-Reference standard: IEC 61000-4-2

②-Reference standard: UL 1446

Item No.	Operating Voltage	Maximum Air Flow		Maximum Air Pressure		Speed	Rated Current	Input Power	Noise	Weight
	(V)	(CMM)	(CFM)	(mmAq)	(inchAq)	(rpm)	(A)	(W)	dB(A)	(g)
MG(1)3812LB-(2)28	12	0.267	9.41	12.74	0.502	9,000	0.16	1.92	34.4	43
MG(1)3812MB-(2)28	12	0.321	11.34	18.90	0.744	11,000	0.20	2.40	39.8	43
MG(1)3812HB-(2)28	12	0.384	13.54	25.50	1.004	13,000	0.28	3.36	44.6	43
MG(1)3812XB-(2)28	12	0.449	15.84	33.60	1.323	15,000	0.50	6.00	48.6	43
MG(1)3812YB-(2)28	12	0.540	19.07	45.70	1.799	18,000	0.60	7.20	53.0	43
MG(1)3824LB-(2)28	24	0.267	9.41	12.74	0.502	9,000	0.11	2.64	34.4	43
MG(1)3824MB-(2)28	24	0.321	11.34	18.90	0.744	11,000	0.15	3.60	39.8	43
MG(1)3824HB-(2)28	24	0.384	13.54	25.50	1.004	13,000	0.18	4.32	44.6	43
MG(1)3824XB-(2)28	24	0.449	15.84	33.60	1.323	15,000	0.25	6.00	48.6	43

Remarks:

(1)-Electric Characteristics:

A: Standard 2-Pin; **T**: Frequency Generation 3-Pin or more.

(2)-Function:

A: None Automatic Restart;
O: Automatic Restart & Locked Current Protection;
R: Rotate Detection Automatic Restart & Locked Current Protection;
S: Thermo-Control Speed, Automatic Restart & Locked Current Protection;
W: Pulse Width Modulation & Automatic Restart & Locked Current Protection (PWM).

The spec is for reference only, it's subject to change without any prior notice

40x40x10mm series B

Bearing Type	☐ 2 Ball	☑ Sleeve	☐ Rifle	☑ FDB
Speed Control	☑ Voltage	☐ Temperature	☐ PWM	
	☐ ±5% Speed tolerance		☑ ±10% Speed tolerance	
Frame Type	☑ 4 Screw	☐ 8 Screw		
Signal output	☑ Alarm Signal	☑ Tacho Signal		
Protection	☑ Lock	☑ Reverse	☐ Over Voltage	☐ Over heat
ESD ①	☐ Class Ⅰ	☐ Class Ⅱ	☑ Class Ⅲ	
Insulation ②	☑ Class A	☐ Class B	☐ Class C	☐ Class F
Safety	☑ UL	☑ TUV	☑ CE	☐ VDE
Motor type	☑ Uni-phase	☐ 2 phase	☐ 3 phase	

AIR FLOW/STATIC-PRESSURE

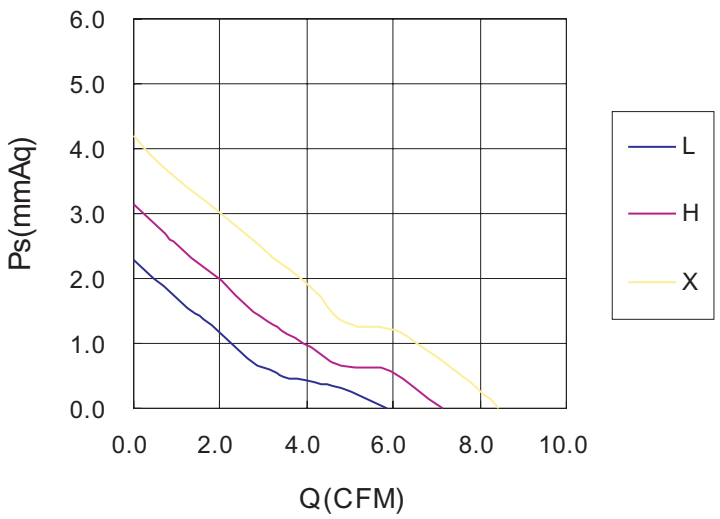

OUTLINE(mm)

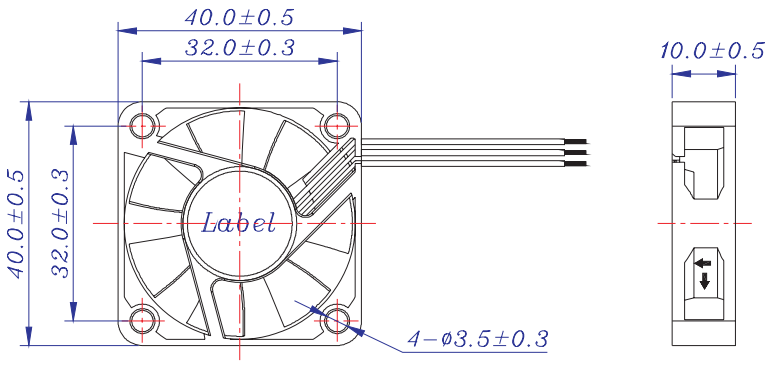

Note:

①-Reference standard: IEC 61000-4-2

②-Reference standard: UL 1446

Item No.	Operating Voltage	Maximum Air Flow		Maximum Air Pressure		Speed	Rated Current	Input Power	Noise	Weight
	(V)	(CMM)	(CFM)	(mmAq)	(inchAq)	(rpm)	(A)	(W)	dB(A)	(g)
MG(1)4005LF-(2)10	5	0.166	5.85	2.29	0.090	4,600	0.15	0.75	19.8	12
MG(1)4005HF-(2)10	5	0.203	7.15	3.13	0.123	5,500	0.25	1.25	25.9	12
MG(1)4005XF-(2)10	5	0.239	8.43	4.21	0.166	6,400	0.30	1.50	30.4	12
MG(1)4012LF-(2)10	12	0.166	5.85	2.29	0.090	4,600	0.08	0.96	19.8	12
MG(1)4012HF-(2)10	12	0.203	7.15	3.13	0.123	5,500	0.11	1.32	25.9	12
MG(1)4012XF-(2)10	12	0.239	8.43	4.21	0.166	6,400	0.13	1.56	30.4	12

Remarks:

(1)-Electric Characteristics:

A: Standard 2-Pin; **T**: Frequency Generation 3-Pin or more.

(2)-Function:

O: Automatic Restart & Locked Current Protection;

R: Rotate Detection Automatic Restart & Locked Current Protection;

S: Thermo-Control Speed, Automatic Restart & Locked Current Protection;

W: Pulse Width Modulation & Automatic Restart & Locked Current Protection (PWM).

The spec is for reference only, it's subject to change without any prior notice

40x40x15mm series B

Bearing Type	☑ 2 Ball	☑ Sleeve	☐ Rifle	☑ FDB
Speed Control	☑ Voltage	☐ Temperature	☐ PWM	
	☐ ±5% Speed tolerance		☑ ±10% Speed tolerance	
Frame Type	☑ 4 Screw	☐ 8 Screw		
Signal output	☑ Alarm Signal	☑ Tacho Signal		
Protection	☑ Lock	☑ Reverse	☐ Over Voltage	☐ Over heat
ESD ①	☐ Class Ⅰ	☐ Class Ⅱ	☑ Class Ⅲ	
Insulation ②	☑ Class A	☐ Class B	☐ Class C	☐ Class F
Safety	☑ UL	☑ TUV	☑ CE	☐ VDE
Motor type	☑ Uni-phase	☑ 2 phase	☐ 3 phase	

AIR FLOW/STATIC-PRESSURE

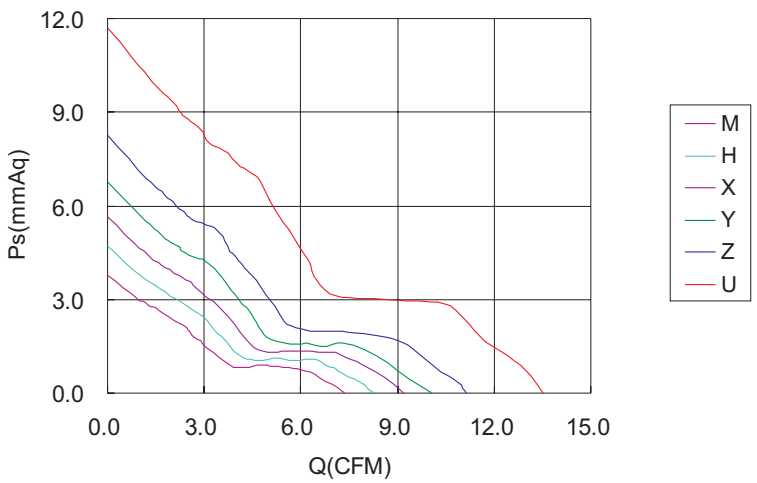

OUTLINE(mm)

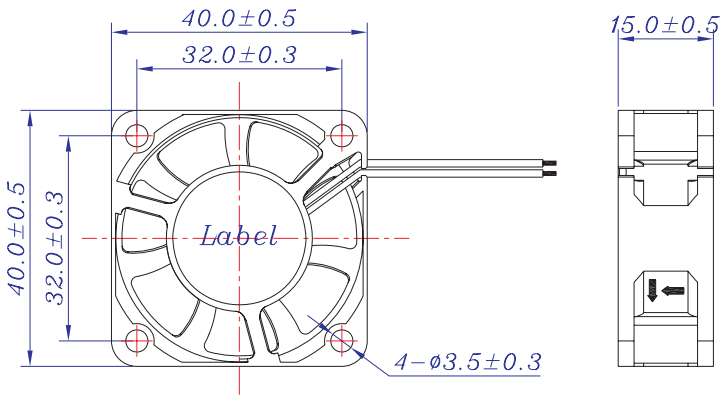

Note:

①-Reference standard: IEC 61000-4-2

②-Reference standard: UL 1446

Item No.	Operating Voltage	Maximum Air Flow		Maximum Air Pressure		Speed	Rated Current	Input Power	Noise	Weight
	(V)	(CMM)	(CFM)	(mmAq)	(inchAq)	(rpm)	(A)	(W)	dB(A)	(g)
MG(1)4005MF-(2)15	5	0.209	7.35	3.79	0.150	5,400	0.20	1.00	26.1	19
MG(1)4005HF-(2)15	5	0.235	8.27	4.72	0.187	6,000	0.26	1.30	27.3	19
MG(1)4005XF-(2)15	5	0.261	9.18	5.63	0.223	6,600	0.30	1.50	30.3	19
MG(1)4005YF-(2)15	5	0.286	10.08	6.77	0.268	7,200	0.36	1.80	32.8	19
MG(1)4005MS-(2)15	5	0.209	7.35	3.79	0.150	5,400	0.20	1.00	26.1	19
MG(1)4005HS-(2)15	5	0.235	8.27	4.72	0.187	6,000	0.26	1.30	27.3	19
MG(1)4005XS-(2)15	5	0.261	9.18	5.63	0.223	6,600	0.30	1.50	30.3	19
MG(1)4005YS-(2)15	5	0.286	10.08	6.77	0.268	7,200	0.36	1.80	32.8	19
MG(1)4005MB-(2)15	5	0.209	7.35	3.79	0.150	5,400	0.20	1.00	26.1	19
MG(1)4005HB-(2)15	5	0.235	8.27	4.72	0.187	6,000	0.26	1.30	27.3	19
MG(1)4005XB-(2)15	5	0.261	9.18	5.63	0.223	6,600	0.30	1.50	30.3	19
MG(1)4005YB-(2)15	5	0.286	10.08	6.77	0.268	7,200	0.36	1.80	32.8	19
MG(1)4012MF-(2)15	12	0.209	7.35	3.79	0.150	5,400	0.10	1.20	26.1	19
MG(1)4012HF-(2)15	12	0.235	8.27	4.72	0.187	6,000	0.11	1.32	27.3	19
MG(1)4012XF-(2)15	12	0.261	9.18	5.63	0.223	6,600	0.13	1.56	30.3	19
MG(1)4012YF-(2)15	12	0.286	10.08	6.77	0.268	7,200	0.15	1.80	32.8	19
MG(1)4012MS-(2)15	12	0.209	7.35	3.79	0.150	5,400	0.10	1.20	26.1	19
MG(1)4012HS-(2)15	12	0.235	8.27	4.72	0.187	6,000	0.11	1.32	27.3	19
MG(1)4012XS-(2)15	12	0.261	9.18	5.63	0.223	6,600	0.13	1.56	30.3	19
MG(1)4012YS-(2)15	12	0.286	10.08	6.77	0.268	7,200	0.15	1.80	32.8	19
MG(1)4012ZS-(2)15	12	0.317	11.14	8.27	0.327	8,000	0.20	2.40	35.3	19
MG(1)4012MB-(2)15	12	0.209	7.35	3.79	0.150	5,400	0.10	1.20	26.1	19
MG(1)4012HB-(2)15	12	0.235	8.27	4.72	0.187	6,000	0.11	1.32	27.3	19
MG(1)4012XB-(2)15	12	0.261	9.18	5.63	0.223	6,600	0.13	1.56	30.3	19
MG(1)4012YB-(2)15	12	0.286	10.08	6.77	0.268	7,200	0.15	1.80	32.8	19
MG(1)4012ZB-(2)15	12	0.317	11.14	8.27	0.327	8,000	0.20	2.40	35.3	19
MG(1)4012UB-(2)15	12	0.384	13.53	11.69	0.462	9,500	0.30	3.60	41.5	19
MG(1)4024MF-(2)15	24	0.209	7.35	3.79	0.150	5,400	0.08	1.92	26.1	19
MG(1)4024HF-(2)15	24	0.235	8.27	4.72	0.187	6,000	0.09	2.16	27.3	19
MG(1)4024XF-(2)15	24	0.261	9.18	5.63	0.223	6,600	0.10	2.40	30.3	19
MG(1)4024MS-(2)15	24	0.209	7.35	3.79	0.150	5,400	0.08	1.92	26.1	19
MG(1)4024HS-(2)15	24	0.235	8.27	4.72	0.187	6,000	0.09	2.16	27.3	19
MG(1)4024XS-(2)15	24	0.261	9.18	5.63	0.223	6,600	0.10	2.40	30.3	19
MG(1)4024YS-(2)15	24	0.286	10.08	6.77	0.268	7,200	0.11	2.64	32.8	19
MG(1)4024ZS-(2)15	24	0.317	11.14	8.27	0.327	8,000	0.13	3.12	35.3	19

Remarks:

(1)-Electric Characteristics:

A: Standard 2-Pin; **T**: Frequency Generation 3-Pin or more.

(2)-Function:

A: None Automatic Restart;

O: Automatic Restart & Locked Current Protection;

R: Rotate Detection Automatic Restart & Locked Current Protection;

S: Thermo-Control Speed, Automatic Restart & Locked Current Protection;

The spec is for reference only, it's subject to change without any prior notice

40x40x15mm series C

Bearing Type	☑ 2 Ball	☐ Sleeve	☑ Rifle	☐ FDB
Speed Control	☑ Voltage	☐ Temperature	☑ PWM	
	☐ ±5% Speed tolerance		☑ ±10% Speed tolerance	
Frame Type	☑ 4 Screw	☐ 8 Screw		
Signal output	☑ Alarm Signal	☑ Tacho Signal		
Protection	☑ Lock	☑ Reverse	☐ Over Voltage	☐ Over heat
ESD ①	☐ Class Ⅰ	☐ Class Ⅱ	☑ Class Ⅲ	
Insulation ②	☑ Class A	☐ Class B	☐ Class C	☐ Class F
Safety	☑ UL	☑ TUV	☑ CE	☐ VDE
Motor type	☑ Uni-phase	☑ 2 phase	☐ 3 phase	

AIR FLOW/STATIC-PRESSURE

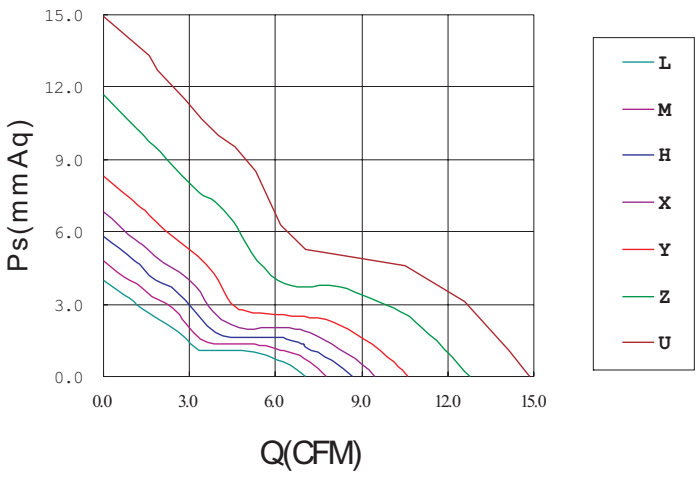

OUTLINE(mm)

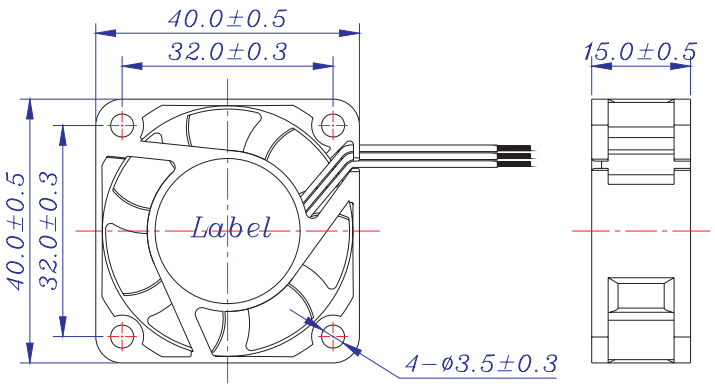

Note:

①-Reference standard: IEC 61000-4-2

②-Reference standard: UL 1446

Item No.	Operating Voltage	Maximum Air Flow		Maximum Air Pressure		Speed	Rated Current	Input Power	Noise	Weight
	(V)	(CMM)	(CFM)	(mmAq)	(inchAq)	(rpm)	(A)	(W)	dB(A)	(g)
MG(1)4005LB-(2)15	5	0.199	7.04	3.97	0.156	5,400	0.18	0.90	25.8	22
MG(1)4005MB-(2)15	5	0.220	7.78	4.82	0.190	6,000	0.20	1.00	30.8	22
MG(1)4005HB-(2)15	5	0.246	8.70	5.80	0.228	6,600	0.26	1.30	32.5	22
MG(1)4005XB-(2)15	5	0.268	9.46	6.80	0.268	7,200	0.30	1.50	33.2	22
MG(1)4005YB-(2)15	5	0.300	10.60	8.32	0.328	8,000	0.36	1.80	36.5	22
MG(1)4005LR-(2)15	5	0.199	7.04	3.97	0.156	5,400	0.18	0.90	25.8	22
MG(1)4005MR-(2)15	5	0.220	7.78	4.82	0.190	6,000	0.20	1.00	30.8	22
MG(1)4005HR-(2)15	5	0.246	8.70	5.80	0.228	6,600	0.26	1.30	32.5	22
MG(1)4005XR-(2)15	5	0.268	9.46	6.80	0.268	7,200	0.30	1.50	33.2	22
MG(1)4005YR-(2)15	5	0.300	10.60	8.32	0.328	8,000	0.36	1.80	36.5	22
MG(1)4012LB-(2)15	12	0.199	7.04	3.97	0.156	5,400	0.09	1.08	25.8	22
MG(1)4012MB-(2)15	12	0.220	7.78	4.82	0.190	6,000	0.10	1.20	30.8	22
MG(1)4012HB-(2)15	12	0.246	8.70	5.80	0.228	6,600	0.11	1.32	32.5	22
MG(1)4012XB-(2)15	12	0.268	9.46	6.80	0.268	7,200	0.13	1.56	33.2	22
MG(1)4012YB-(2)15	12	0.300	10.60	8.32	0.328	8,000	0.15	1.80	36.5	22
MG(1)4012ZB-(2)15	12	0.361	12.75	11.66	0.460	9,500	0.20	2.40	40.2	22
MG(1)4012UB-(2)15	12	0.420	14.84	14.90	0.587	11,000	0.30	3.60	47.8	22
MG(1)4012LR-(2)15	12	0.199	7.04	3.97	0.156	5,400	0.09	1.08	25.8	22
MG(1)4012MR-(2)15	12	0.220	7.78	4.82	0.190	6,000	0.10	1.20	30.8	22
MG(1)4012HR-(2)15	12	0.246	8.70	5.80	0.228	6,600	0.11	1.32	32.5	22
MG(1)4012XR-(2)15	12	0.268	9.46	6.80	0.268	7,200	0.13	1.56	33.2	22
MG(1)4012YR-(2)15	12	0.300	10.60	8.32	0.328	8,000	0.15	1.80	36.5	22
MG(1)4012ZR-(2)15	12	0.361	12.75	11.66	0.460	9,500	0.20	2.40	40.2	22
MG(1)4024LB-(2)15	24	0.199	7.04	3.97	0.156	5,400	0.07	1.68	25.8	22
MG(1)4024MB-(2)15	24	0.220	7.78	4.82	0.190	6,000	0.08	1.92	30.8	22
MG(1)4024HB-(2)15	24	0.246	8.70	5.80	0.228	6,600	0.09	2.16	32.5	22
MG(1)4024XB-(2)15	24	0.268	9.46	6.80	0.268	7,200	0.10	2.40	33.2	22
MG(1)4024YB-(2)15	24	0.300	10.60	8.32	0.328	8,000	0.11	2.64	36.5	22
MG(1)4024ZB-(2)15	24	0.361	12.75	11.66	0.460	9,500	0.13	3.12	40.2	22
MG(1)4024UB-(2)15	24	0.420	14.84	14.90	0.587	11,000	0.17	4.08	47.8	22
MG(1)4024LR-(2)15	24	0.199	7.04	3.97	0.156	5,400	0.07	1.68	25.8	22
MG(1)4024MR-(2)15	24	0.220	7.78	4.82	0.190	6,000	0.08	1.92	30.8	22
MG(1)4024HR-(2)15	24	0.246	8.70	5.80	0.228	6,600	0.09	2.16	32.5	22
MG(1)4024XR-(2)15	24	0.268	9.46	6.80	0.268	7,200	0.10	2.40	33.2	22
MG(1)4024YR-(2)15	24	0.300	10.60	8.32	0.328	8,000	0.11	2.64	36.5	22
MG(1)4024ZR-(2)15	24	0.361	12.75	11.66	0.460	9,500	0.13	3.12	40.2	22

Remarks:

(1)-Electric Characteristics:

A: Standard 2-Pin; **T**: Frequency Generation 3-Pin or more.

(2)-Function:

A: None Automatic Restart;
O: Automatic Restart & Locked Current Protection;
R: Rotate Detection Automatic Restart & Locked Current Protection;
S: Thermo-Control Speed, Automatic Restart & Locked Current Protection;
W: Pulse Width Modulation & Automatic Restart & Locked Current Protection (PWM).

The spec is for reference only, it's subject to change without any prior notice

40x40x20mm series B

Bearing Type	☑ 2 Ball	☐ Sleeve	☑ Rifle	☐ FDB
Speed Control	☑ Voltage	☐ Temperature	☐ PWM	
	☐ ±5% Speed tolerance		☑ ±10% Speed tolerance	
Frame Type	☑ 4 Screw	☐ 8 Screw		
Signal output	☑ Alarm Signal	☑ Tacho Signal		
Protection	☑ Lock	☑ Reverse	☐ Over Voltage	☐ Over heat
ESD ①	☐ Class Ⅰ	☐ Class Ⅱ	☑ Class Ⅲ	
Insulation ②	☑ Class A	☐ Class B	☐ Class C	☐ Class F
Safety	☑ UL	☑ TUV	☑ CE	☐ VDE
Motor type	☑ Uni-phase	☑ 2 phase	☐ 3 phase	

AIR FLOW/STATIC-PRESSURE

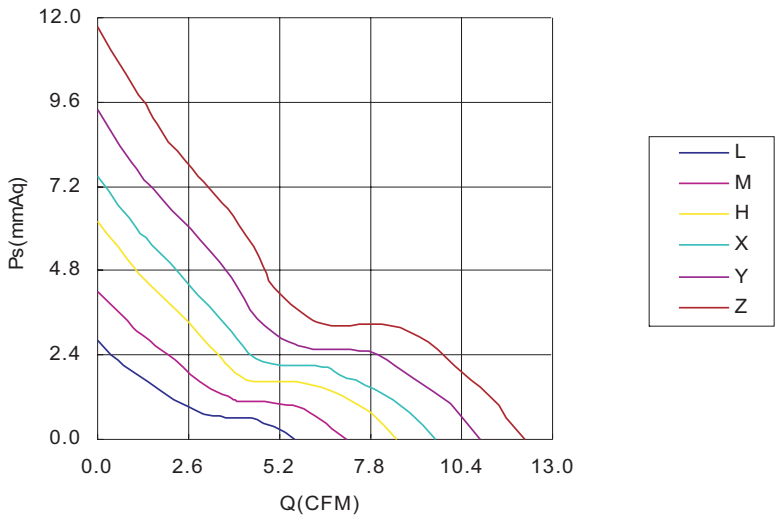

OUTLINE(mm)

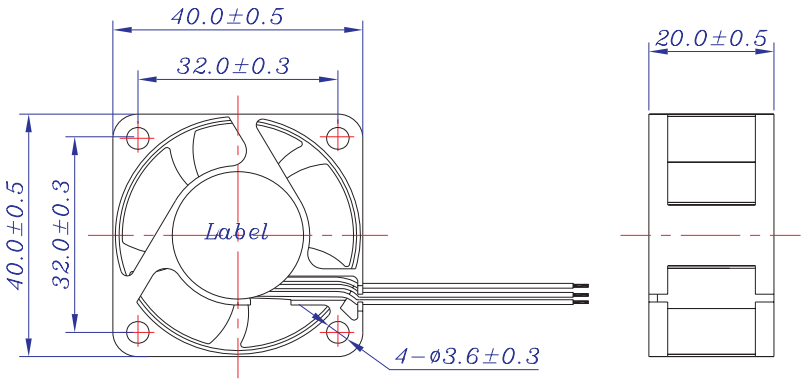

Note:

①-Reference standard: IEC 61000-4-2

②-Reference standard: UL 1446

Item No.	Operating Voltage	Maximum Air Flow		Maximum Air Pressure		Speed	Rated Current	Input Power	Noise	Weight
	(V)	(CMM)	(CFM)	(mmAq)	(inchAq)	(rpm)	(A)	(W)	dB(A)	(g)
MG(1)4005LB-(2)20	5	0.159	5.63	2.83	0.111	4,800	0.22	1.10	25.7	26
MG(1)4005MB-(2)20	5	0.202	7.12	4.21	0.166	6,000	0.28	1.40	27.7	26
MG(1)4005HB-(2)20	5	0.242	8.55	6.19	0.244	7,200	0.32	1.60	31.6	26
MG(1)4005XB-(2)20	5	0.273	9.65	7.50	0.295	8,000	0.43	2.15	33.8	26
MG(1)4012LB-(2)20	12	0.159	5.63	2.83	0.111	4,800	0.09	1.08	25.7	26
MG(1)4012MB-(2)20	12	0.202	7.12	4.21	0.166	6,000	0.11	1.32	27.7	26
MG(1)4012HB-(2)20	12	0.242	8.55	6.19	0.244	7,200	0.13	1.56	31.6	26
MG(1)4012XB-(2)20	12	0.273	9.65	7.50	0.295	8,000	0.15	1.80	33.8	26
MG(1)4012YB-(2)20	12	0.310	10.94	9.38	0.369	9,000	0.18	2.16	36.6	26
MG(1)4012ZB-(2)20	12	0.346	12.20	11.74	0.462	10,000	0.22	2.64	39.3	26
MG(1)4024LB-(2)20	24	0.159	5.63	2.83	0.111	4,800	0.07	1.68	25.7	26
MG(1)4024MB-(2)20	24	0.202	7.12	4.21	0.166	6,000	0.09	2.16	27.7	26
MG(1)4024HB-(2)20	24	0.242	8.55	6.19	0.244	7,200	0.11	2.64	31.6	26
MG(1)4024XB-(2)20	24	0.273	9.65	7.50	0.295	8,000	0.13	3.12	33.8	26
MG(1)4024YB-(2)20	24	0.310	10.94	9.38	0.369	9,000	0.14	3.36	36.6	26

Remarks:

(1)-Electric Characteristics:

A: Standard 2-Pin; **T**: Frequency Generation 3-Pin or more.

(2)-Function:

A: None Automatic Restart;

O: Automatic Restart & Locked Current Protection;

R: Rotate Detection Automatic Restart & Locked Current Protection;

S: Thermo-Control Speed, Automatic Restart & Locked Current Protection;

The spec is for reference only, it's subject to change without any prior notice

40x40x20mm series D

Bearing Type	☑ 2 Ball	☐ Sleeve	☑ Rifle	☑ FDB
Speed Control	☑ Voltage	☐ Temperature	☑ PWM	
	☐ ±5% Speed tolerance		☑ ±10% Speed tolerance	
Frame Type	☑ 4 Screw	☐ 8 Screw		
Signal output	☑ Alarm Signal	☑ Tacho Signal		
Protection	☑ Lock	☑ Reverse	☐ Over Voltage	☐ Over heat
ESD ①	☐ Class Ⅰ	☐ Class Ⅱ	☑ Class Ⅲ	
Insulation ②	☑ Class A	☐ Class B	☐ Class C	☐ Class F
Safety	☑ UL	☑ TUV	☑ CE	☐ VDE
Motor type	☑ Uni-phase	☑ 2 phase	☐ 3 phase	

AIR FLOW/STATIC-PRESSURE

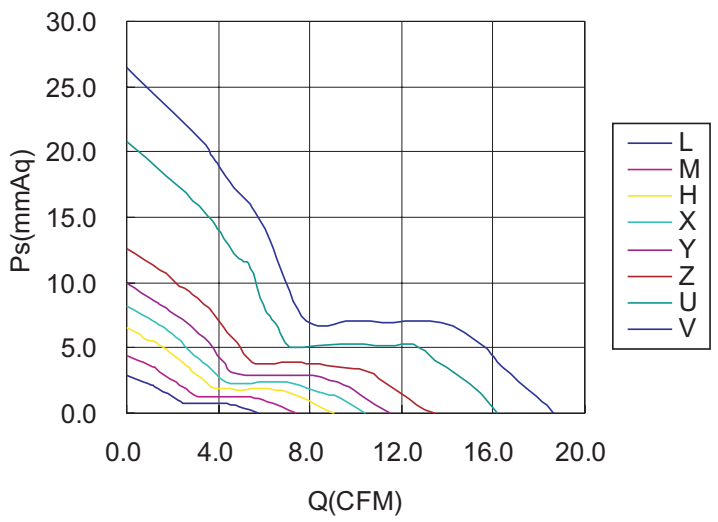

OUTLINE(mm)

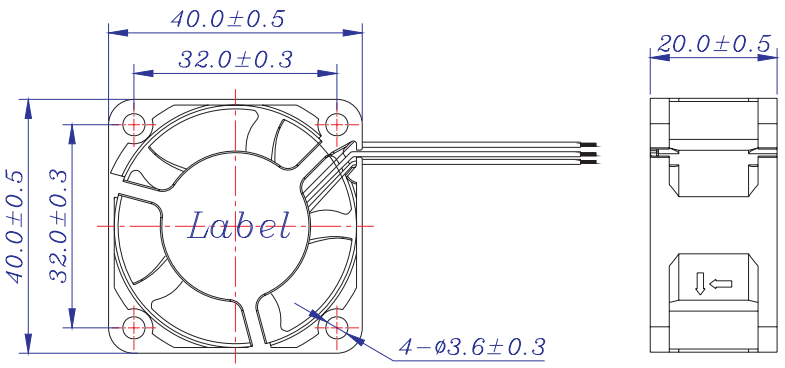

Note:

①-Reference standard: IEC 61000-4-2

②-Reference standard: UL 1446

Item No.	Operating Voltage	Maximum Air Flow		Maximum Air Pressure		Speed	Rated Current	Input Power	Noise	Weight
	(V)	(CMM)	(CFM)	(mmAq)	(inchAq)	(rpm)	(A)	(W)	dB(A)	(g)
MG(1)4005LF-(2)20	5	0.164	5.78	2.86	0.113	4,800	0.22	1.10	20.2	30
MG(1)4005MF-(2)20	5	0.211	7.44	4.42	0.174	6,000	0.28	1.40	25.9	30
MG(1)4005HF-(2)20	5	0.257	9.06	6.50	0.256	7,200	0.32	1.60	30.1	30
MG(1)4005LR-(2)20	5	0.164	5.78	2.86	0.113	4,800	0.22	1.10	20.3	31
MG(1)4005MR-(2)20	5	0.211	7.44	4.42	0.174	6,000	0.28	1.40	24.9	31
MG(1)4005HR-(2)20	5	0.257	9.06	6.50	0.256	7,200	0.32	1.60	30.5	31
MG(1)4005LB-(2)20	5	0.164	5.78	2.86	0.113	4,800	0.22	1.10	20.3	32
MG(1)4005MB-(2)20	5	0.211	7.44	4.42	0.174	6,000	0.28	1.40	26.3	32
MG(1)4005HB-(2)20	5	0.257	9.06	6.50	0.256	7,200	0.32	1.60	31.3	32
MG(1)4005XB-(2)20	5	0.296	10.46	8.25	0.325	8,000	0.43	2.15	33.7	32
MG(1)4012MF-(2)20	12	0.164	5.78	2.86	0.113	4,800	0.11	1.32	20.2	30
MG(1)4012HF-(2)20	12	0.211	7.44	4.42	0.174	6,000	0.13	1.56	25.9	30
MG(1)4012XF-(2)20	12	0.257	9.06	6.50	0.256	7,200	0.15	1.80	30.1	30
MG(1)4012MR-(2)20	12	0.164	5.78	2.86	0.113	4,800	0.11	1.32	20.3	31
MG(1)4012HR-(2)20	12	0.211	7.44	4.42	0.174	6,000	0.13	1.56	24.9	31
MG(1)4012XR-(2)20	12	0.257	9.06	6.50	0.256	7,200	0.15	1.80	30.5	31
MG(1)4012YR-(2)20	12	0.296	10.46	8.25	0.325	8,000	0.18	2.16	33.9	31
MG(1)4012LB-(2)20	12	0.164	5.78	2.86	0.113	4,800	0.09	1.08	20.3	32
MG(1)4012MB-(2)20	12	0.211	7.44	4.42	0.174	6,000	0.11	1.32	26.3	32
MG(1)4012HB-(2)20	12	0.257	9.06	6.50	0.256	7,200	0.13	1.56	31.3	32
MG(1)4012XB-(2)20	12	0.296	10.46	8.25	0.325	8,000	0.15	1.80	33.7	32
MG(1)4012YB-(2)20	12	0.327	11.54	9.90	0.390	9,000	0.18	2.16	37.8	32
MG(1)4012ZB-(2)20	12	0.380	13.42	12.58	0.495	10,000	0.22	2.64	39.5	32
MG(1)4012UB-(2)20	12	0.458	16.16	20.80	0.819	13,000	0.30	3.60	46.0	32
MG(1)4024LF-(2)20	24	0.164	5.78	2.86	0.113	4,800	0.07	1.68	20.2	30
MG(1)4024MF-(2)20	24	0.211	7.44	4.42	0.174	6,000	0.09	2.16	25.9	30
MG(1)4024HF-(2)20	24	0.257	9.06	6.50	0.256	7,200	0.11	2.64	30.1	30
MG(1)4024LR-(2)20	24	0.164	5.78	2.86	0.113	4,800	0.07	1.68	20.3	31
MG(1)4024MR-(2)20	24	0.211	7.44	4.42	0.174	6,000	0.09	2.16	24.9	31
MG(1)4024HR-(2)20	24	0.257	9.06	6.50	0.256	7,200	0.11	2.64	30.5	31
MG(1)4024LB-(2)20	24	0.164	5.78	2.86	0.113	4,800	0.07	1.68	20.3	32
MG(1)4024MB-(2)20	24	0.211	7.44	4.42	0.174	6,000	0.09	2.16	26.3	32
MG(1)4024HB-(2)20	24	0.257	9.06	6.50	0.256	7,200	0.11	2.64	31.3	32
MG(1)4024XB-(2)20	24	0.296	10.46	8.25	0.325	8,000	0.13	3.12	33.7	32
MG(1)4024YB-(2)20	24	0.327	11.54	9.90	0.390	9,000	0.14	3.36	37.8	32
MG(1)4024ZB-(2)20	24	0.380	13.42	12.58	0.495	10,000	0.16	3.84	39.5	32

Remarks:

(1)-Electric Characteristics:

A: Standard 2-Pin; **T**: Frequency Generation 3-Pin or more.

(2)-Function:

A: None Automatic Restart;
O: Automatic Restart & Locked Current Protection;
R: Rotate Detection Automatic Restart & Locked Current Protection;
S: Thermo-Control Speed, Automatic Restart & Locked Current Protection;
W: Pulse Width Modulation & Automatic Restart & Locked Current Protection (PWM).

The spec is for reference only, it's subject to change without any prior notice

40x40x20mm series E

Bearing Type	☑ 2 Ball	☐ Sleeve	☐ Rifle	☐ FDB
Speed Control	☑ Voltage	☐ Temperature	☑ PWM	
	☐ ±5% Speed tolerance		☑ ±10% Speed tolerance	
Frame Type	☑ 4 Screw	☐ 8 Screw		
Signal output	☑ Alarm Signal	☑ Tacho Signal		
Protection	☑ Lock	☑ Reverse	☐ Over Voltage	☐ Over heat
ESD ①	☐ Class Ⅰ	☐ Class Ⅱ	☑ Class Ⅲ	
Insulation ②	☑ Class A	☐ Class B	☐ Class C	☐ Class F
Safety	☑ UL	☑ TUV	☑ CE	☐ VDE
Motor type	☑ Uni-phase	☐ 2 phase	☐ 3 phase	

AIR FLOW/STATIC-PRESSURE

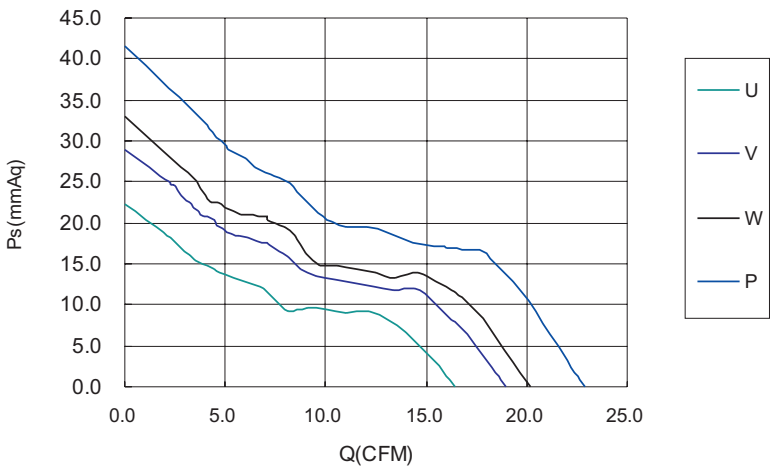

OUTLINE(mm)

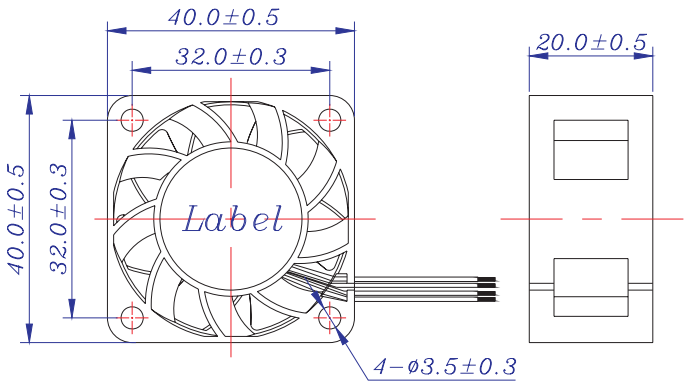

Note:

①-Reference standard: IEC 61000-4-2

②-Reference standard: UL 1446

Item No.	Operating Voltage	Maximum Air Flow		Maximum Air Pressure		Speed	Rated Current	Input Power	Noise	Weight
	(V)	(CMM)	(CFM)	(mmAq)	(inchAq)	(rpm)	(A)	(W)	dB(A)	(g)
MG(1)4012UB-(2)20	12	0.465	16.43	22.20	0.874	13,000	0.30	3.60	51.3	40.5
MG(1)4012VB-(2)20	12	0.538	18.98	28.90	1.138	15,000	0.50	6.00	55.1	40.5
MG(1)4012WB-(2)20	12	0.571	20.16	33.10	1.303	16,000	0.60	7.20	56.5	40.5
MG(1)4012PB-(2)20	12	0.648	22.86	41.60	1.638	18,000	0.80	9.60	59.2	40.5

Remarks:

(1)-Electric Characteristics:

A: Standard 2-Pin; **T**: Frequency Generation 3-Pin or more.

(2)-Function:

A: None Automatic Restart;
O: Automatic Restart & Locked Current Protection;
R: Rotate Detection Automatic Restart & Locked Current Protection;
S: Thermo-Control Speed, Automatic Restart & Locked Current Protection;
W: Pulse Width Modulation & Automatic Restart & Locked Current Protection (PWM).

The spec is for reference only, it's subject to change without any prior notice

40x40x28mm series B

Bearing Type	☑ 2 Ball	☐ Sleeve	☐ Rifle	☐ FDB
Speed Control	☑ Voltage	☐ Temperature	☑ PWM	
	☐ ±5% Speed tolerance		☑ ±10% Speed tolerance	
Frame Type	☑ 4 Screw	☑ 8 Screw		
Signal output	☑ Alarm Signal	☑ Tacho Signal		
Protection	☑ Lock	☑ Reverse	☐ Over Voltage	☐ Over heat
ESD ①	☐ Class Ⅰ	☐ Class Ⅱ	☑ Class Ⅲ	
Insulation ②	☑ Class A	☐ Class B	☐ Class C	☐ Class F
Safety	☑ UL	☑ TUV	☑ CE	☐ VDE
Motor type	☑ Uni-phase	☐ 2 phase	☐ 3 phase	

AIR FLOW/STATIC-PRESSURE

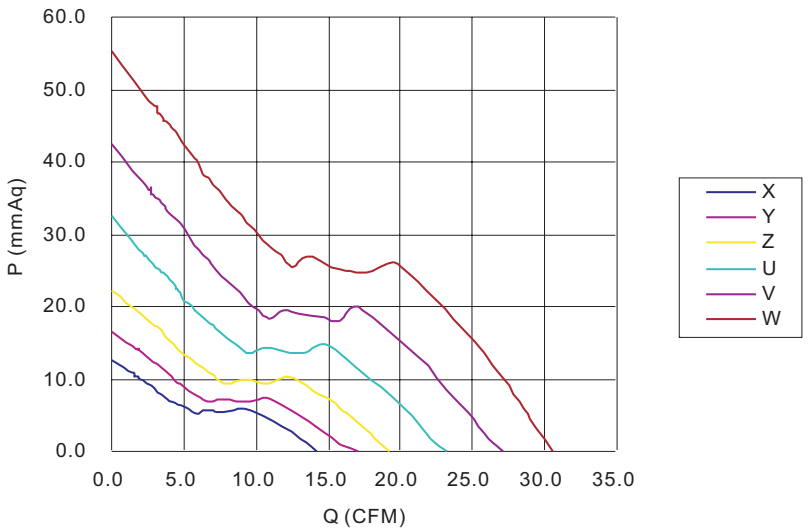

OUTLINE(mm)

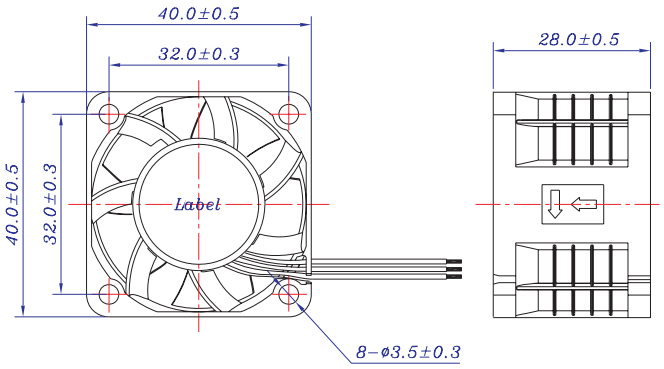

Note:

①-Reference standard: IEC 61000-4-2

②-Reference standard: UL 1446

Item No.	Operating Voltage	Maximum Air Flow		Maximum Air Pressure		Speed	Rated Current	Input Power	Noise	Weight
	(V)	(CMM)	(CFM)	(mmAq)	(inchAq)	(rpm)	(A)	(W)	dB(A)	(g)
MG(1)4012XB-(2)28	12	0.402	14.18	12.60	0.496	8,000	0.25	3.00	41.1	45
MG(1)4012YB-(2)28	12	0.484	17.10	16.60	0.654	9,500	0.38	4.56	46.4	45
MG(1)4012ZB-(2)28	12	0.546	19.27	22.30	0.878	11,000	0.40	4.80	50.0	45
MG(1)4012UB-(2)28	12	0.657	23.20	32.50	1.280	13,000	0.55	6.60	55.3	45
MG(1)4012VB-(2)28	12	0.767	27.09	42.50	1.673	15,000	0.80	9.60	59.1	45
MG(1)4012WB-(2)28	12	0. 921	32.50	61.50	2.420	18,000	1.20	14.40	64.4	45
MG(1)4024XB-(2)28	24	0.402	14.18	12.60	0.496	8,000	0.12	2.88	41.1	45
MG(1)4024YB-(2)28	24	0.484	17.10	16.60	0.654	9,500	0.15	3.60	46.4	45
MG(1)4024ZB-(2)28	24	0.546	19.27	22.30	0.878	11,000	0.20	4.80	50.0	45
MG(1)4024UB-(2)28	24	0.657	23.20	32.50	1.280	13,000	0.30	7.20	55.3	45

Remarks:

(1)-Electric Characteristics:

A: Standard 2-Pin; **T**: Frequency Generation 3-Pin or more.

(2)-Function:

O: Automatic Restart & Locked Current Protection;

R: Rotate Detection Automatic Restart & Locked Current Protection;

S: Thermo-Control Speed, Automatic Restart & Locked Current Protection;

W: Pulse Width Modulation & Automatic Restart & Locked Current Protection (PWM).

The spec is for reference only, it's subject to change without any prior notice

40x40x28mm series C

Bearing Type	☑ 2 Ball	☐ Sleeve	☐ Rifle	☐ FDB
Speed Control	☑ Voltage	☐ Temperature	☑ PWM	
	☐ ±5% Speed tolerance		☑ ±10% Speed tolerance	
Frame Type	☑ 4 Screw	☑ 8 Screw		
Signal output	☑ Alarm Signal	☑ Tacho Signal		
Protection	☑ Lock	☑ Reverse	☐ Over Voltage	☐ Over heat
ESD ①	☐ Class Ⅰ	☐ Class Ⅱ	☑ Class Ⅲ	
Insulation ②	☑ Class A	☐ Class B	☐ Class C	☐ Class F
Safety	☑ UL	☑ TUV	☑ CE	☐ VDE
Motor type	☑ Uni-phase	☐ 2 phase	☐ 3 phase	

AIR FLOW/STATIC-PRESSURE

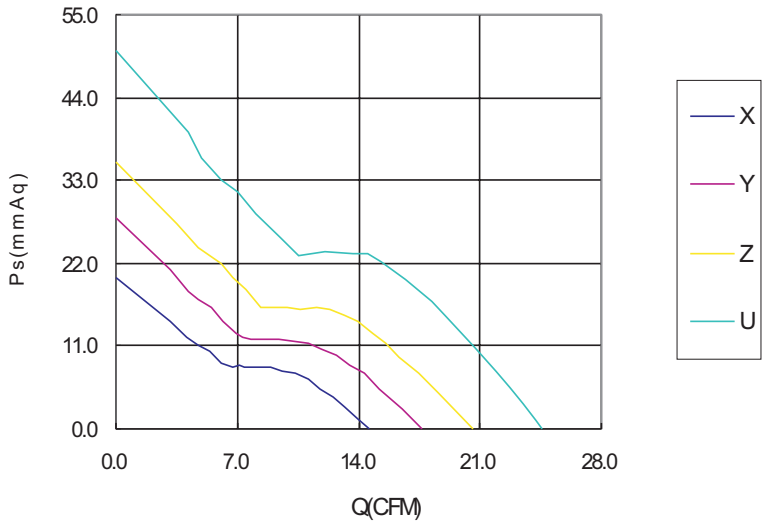

OUTLINE(mm)

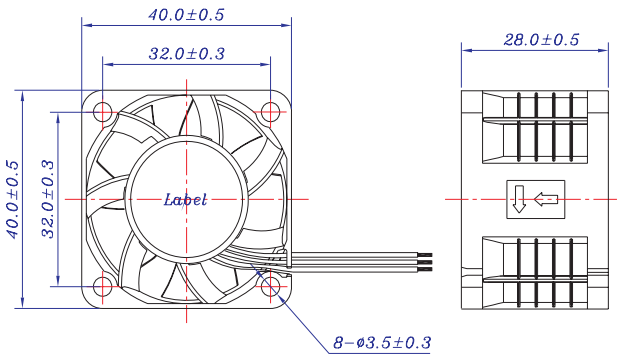

Note:

①-Reference standard: IEC 61000-4-2

②-Reference standard: UL 1446

Item No.	Operating Voltage	Maximum Air Flow		Maximum Air Pressure		Speed	Rated Current	Input Power	Noise	Weight
	(V)	(CMM)	(CFM)	(mmAq)	(inchAq)	(rpm)	(A)	(W)	dB(A)	(g)
MG(1)4012XB-(2)28	12	0.415	14.65	20.20	0.795	11,000	0.25	3.00	41.1	45
MG(1)4012YB-(2)28	12	0.501	17.69	28.00	1.102	13,000	0.38	4.56	45.6	45
MG(1)4012ZB-(2)28	12	0.582	20.55	35.40	1.394	15,000	0.40	4.80	49.8	45
MG(1)4012UB-(2)28	12	0.696	24.56	50.90	2.004	18,000	0.55	6.60	53.8	45

Remarks:

(1)-Electric Characteristics:

A: Standard 2-Pin; **T**: Frequency Generation 3-Pin or more.

(2)-Function:

O: Automatic Restart & Locked Current Protection;

R: Rotate Detection Automatic Restart & Locked Current Protection;

S: Thermo-Control Speed, Automatic Restart & Locked Current Protection;

W: Pulse Width Modulation & Automatic Restart & Locked Current Protection (PWM).

The spec is for reference only, it's subject to change without any prior notice

40x40x28mm series D

Bearing Type	☑ 2 Ball	☐ Sleeve	☐ Rifle	☐ FDB
Speed Control	☑ Voltage	☐ Temperature	☑ PWM	
	☐ ±5% Speed tolerance		☑ ±10% Speed tolerance	
Frame Type	☐ 4 Screw	☑ 8 Screw		
Signal output	☑ Alarm Signal	☑ Tacho Signal		
Protection	☑ Lock	☑ Reverse	☐ Over Voltage	☐ Over heat
ESD ①	☐ Class Ⅰ	☐ Class Ⅱ	☑ Class Ⅲ	
Insulation ②	☑ Class A	☐ Class B	☐ Class C	☐ Class F
Safety	☑ UL	☑ TUV	☑ CE	☐ VDE
Motor type	☑ Uni-phase	☐ 2 phase	☐ 3 phase	

AIR FLOW/STATIC-PRESSURE

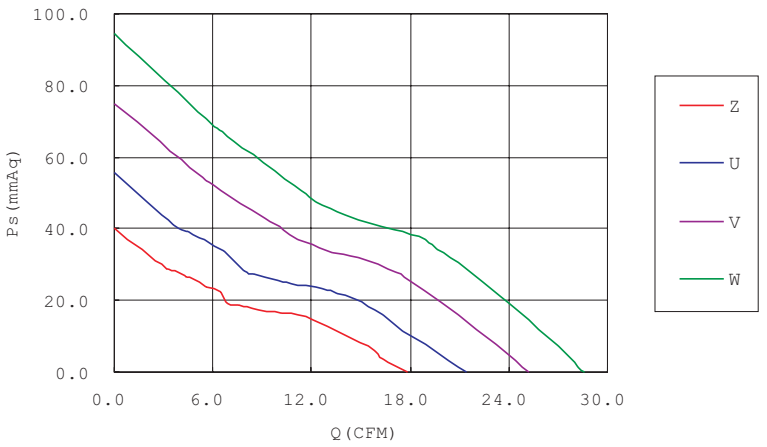

OUTLINE(mm)

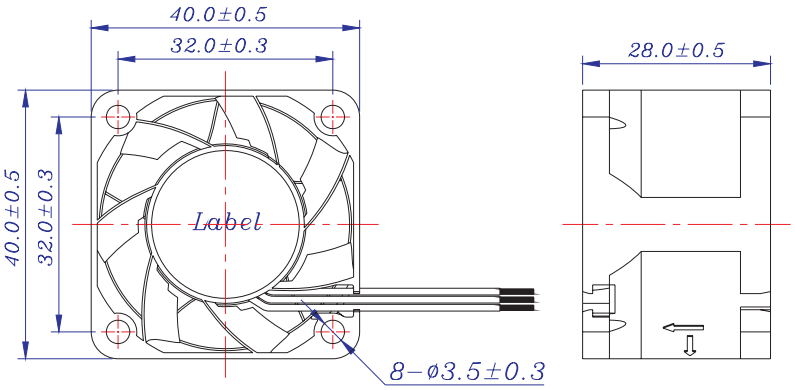

Note:

①-Reference standard: IEC 61000-4-2

②-Reference standard: UL 1446

Item No.	Operating Voltage	Maximum Air Flow		Maximum Air Pressure		Speed	Rated Current	Input Power	Noise	Weight
	(V)	(CMM)	(CFM)	(mmAq)	(inchAq)	(rpm)	(A)	(W)	dB(A)	(g)
MG(1)4012ZB-(2)28	12	0.506	17.86	40.20	1.583	15,000	0.40	4.80	47.4	82
MG(1)4012UB-(2)28	12	0.607	21.44	55.90	2.201	18,000	0.55	6.60	51.1	82
MG(1)4012VB-(2)28	12	0.714	25.22	74.70	2.941	21,000	0.80	9.60	56.5	82
MG(1)4012WB-(2)28	12	0.809	28.57	94.40	3.717	24,000	1.20	14.40	60.2	82
MG(1)4024ZB-(2)28	24	0.506	17.86	40.20	1.583	15,000	0.20	4.80	47.4	82
MG(1)4024UB-(2)28	24	0.607	21.44	55.90	2.201	18,000	0.30	7.20	51.1	82

Remarks:

(1)-Electric Characteristics:

A: Standard 2-Pin; **T**: Frequency Generation 3-Pin or more.

(2)-Function:

A: None Automatic Restart;
O: Automatic Restart & Locked Current Protection;
R: Rotate Detection Automatic Restart & Locked Current Protection;
S: Thermo-Control Speed, Automatic Restart & Locked Current Protection;
W: Pulse Width Modulation & Automatic Restart & Locked Current Protection (PWM).

The spec is for reference only, it's subject to change without any prior notice

40x40x48mm series

Bearing Type	☑ 2 Ball	☐ Sleeve	☐ Rifle	☐ FDB
Speed Control	☑ Voltage	☐ Temperature	☑ PWM	
	☐ ±5% Speed tolerance		☑ ±10% Speed tolerance	
Frame Type	☑ 4 Screw	☐ 8 Screw		
Signal output	☑ Alarm Signal	☑ Tacho Signal		
Protection	☑ Lock	☑ Reverse	☐ Over Voltage	☐ Over heat
ESD ①	☐ Class Ⅰ	☐ Class Ⅱ	☑ Class Ⅲ	
Insulation ②	☑ Class A	☐ Class B	☐ Class C	☐ Class F
Safety	☑ UL	☑ TUV	☑ CE	☐ VDE
Motor type	☑ Uni-phase	☐ 2 phase	☐ 3 phase	

AIR FLOW/STATIC-PRESSURE

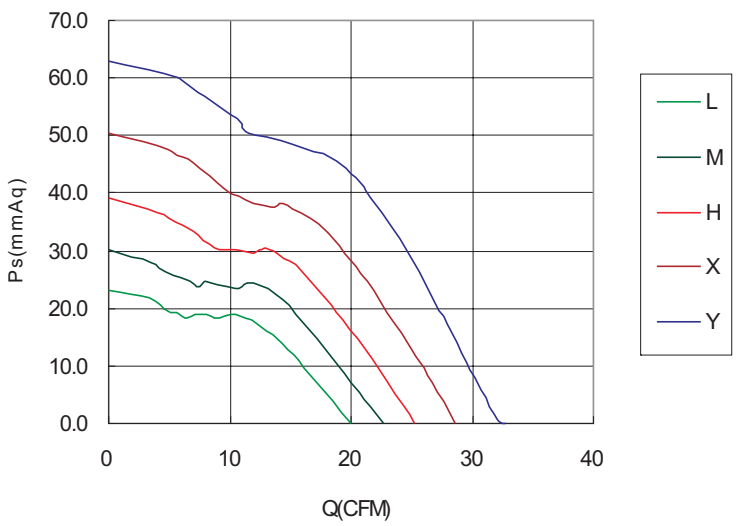

OUTLINE(mm)

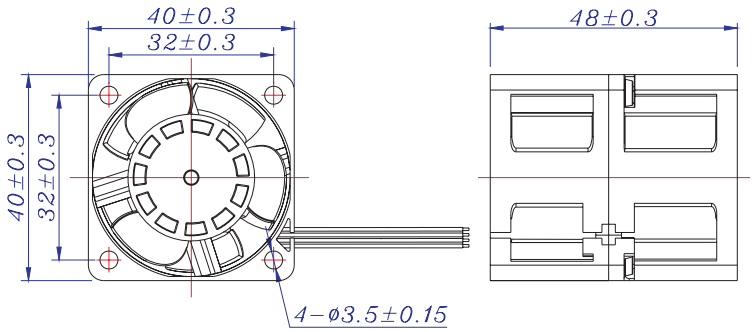

Note:

①-Reference standard: IEC 61000-4-2

②-Reference standard: UL 1446

Item No.	Operating Voltage	Maximum Air Flow		Maximum Air Pressure		Speed	Rated Current	Input Power	Noise	Weight
	(V)	(CMM)	(CFM)	(mmAq)	(inchAq)	(rpm)	(A)	(W)	dB(A)	(g)
MG(1)4012LB-(2)48	12	0.560	20.06	23.20	0.920	11,000/10,000	0.60	7.20	54.2	88
MG(1)4012MB-(2)48	12	0.640	22.65	30.20	1.190	12,500/11,500	0.75	9.00	57.2	88
MG(1)4012HB-(2)48	12	0.710	25.24	39.10	1.540	14,000/12,500	0.95	11.40	59.4	88
MG(1)4012XB-(2)48	12	0.800	28.54	50.40	1.980	16,000/13,500	1.40	16.80	64.2	88
MG(1)4012YB-(2)48	12	0.930	32.81	62.80	2.470	18,000/15,500	2.00	24.00	66.0	88

Remarks:

(1)-Electric Characteristics:

A: Standard 2-Pin; **T**: Frequency Generation 3-Pin or more.

(2)-Function:

A: None Automatic Restart;
O: Automatic Restart & Locked Current Protection;
R: Rotate Detection Automatic Restart & Locked Current Protection;
S: Thermo-Control Speed, Automatic Restart & Locked Current Protection;
W: Pulse Width Modulation & Automatic Restart & Locked Current Protection (PWM).

The spec is for reference only, it's subject to change without any prior notice

40x40x56mm series A

Bearing Type	☑ 2 Ball	☐ Sleeve	☐ Rifle	☐ FDB
Speed Control	☑ Voltage	☐ Temperature	☑ PWM	
	☐ ±5% Speed tolerance		☑ ±10% Speed tolerance	
Frame Type	☑ 4 Screw	☑ 8 Screw		
Signal output	☑ Alarm Signal	☑ Tacho Signal		
Protection	☑ Lock	☑ Reverse	☐ Over Voltage	☐ Over heat
ESD ①	☐ Class Ⅰ	☐ Class Ⅱ	☑ Class Ⅲ	
Insulation ②	☑ Class A	☐ Class B	☐ Class C	☐ Class F
Safety	☑ UL	☑ TUV	☑ CE	☐ VDE
Motor type	☑ Uni-phase	☐ 2 phase	☐ 3 phase	

AIR FLOW/STATIC-PRESSURE

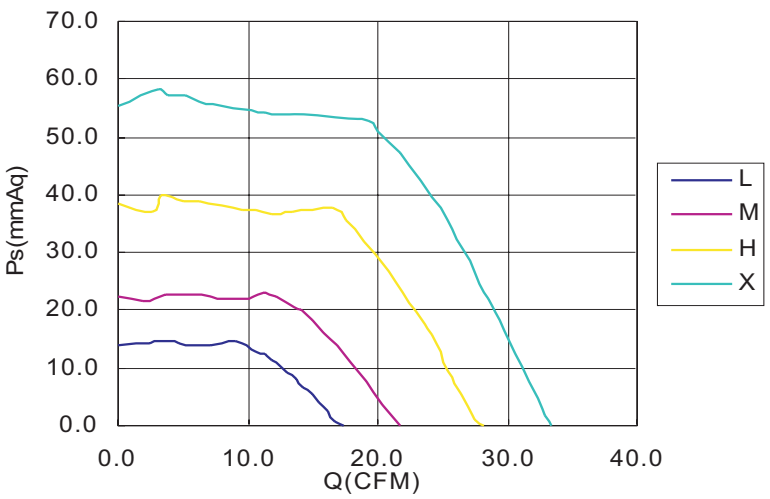

OUTLINE(mm)

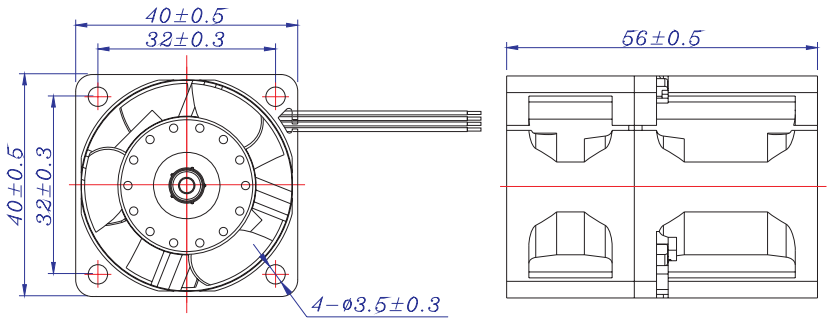

Note:

①-Reference standard: IEC 61000-4-2

②-Reference standard: UL 1446

Item No.	Operating Voltage	Maximum Air Flow		Maximum Air Pressure		Speed	Rated Current	Input Power	Noise	Weight
	(V)	(CMM)	(CFM)	(mmAq)	(inchAq)	(rpm)	(A)	(W)	dB(A)	(g)
MG(1)4012LB-(2)56	12	0.491	17.32	14.10	0.555	8,000	0.90	10.80	51.1	112
MG(1)4012MB-(2)56	12	0.615	21.72	22.20	0.874	10,000	1.20	14.40	58.1	112
MG(1)4012HB-(2)56	12	0.800	28.24	38.60	1.520	13,000	1.50	18.00	63.8	112
MG(1)4012XB-(2)56	12	0.946	33.40	55.40	2.181	15,000	2.00	24.00	70.1	112

Remarks:

(1)-Electric Characteristics:

A: Standard 2-Pin; **T**: Frequency Generation 3-Pin or more.

(2)-Function:

A: None Automatic Restart;
O: Automatic Restart & Locked Current Protection;
R: Rotate Detection Automatic Restart & Locked Current Protection;
S: Thermo-Control Speed, Automatic Restart & Locked Current Protection;
W: Pulse Width Modulation & Automatic Restart & Locked Current Protection (PWM).

The spec is for reference only, it's subject to change without any prior notice

40x40x56mm series B

Bearing Type	☑ 2 Ball	☐ Sleeve	☐ Rifle	☐ FDB
Speed Control	☑ Voltage	☐ Temperature	☑ PWM	
	☐ ±5% Speed tolerance		☑ ±10% Speed tolerance	
Frame Type	☑ 4 Screw	☐ 8 Screw		
Signal output	☑ Alarm Signal	☑ Tacho Signal		
Protection	☑ Lock	☑ Reverse	☐ Over Voltage	☐ Over heat
ESD ①	☐ Class Ⅰ	☐ Class Ⅱ	☑ Class Ⅲ	
Insulation ②	☑ Class A	☐ Class B	☐ Class C	☐ Class F
Safety	☑ UL	☑ TUV	☑ CE	☐ VDE
Motor type	☑ Uni-phase	☐ 2 phase	☐ 3 phase	

AIR FLOW/STATIC-PRESSURE

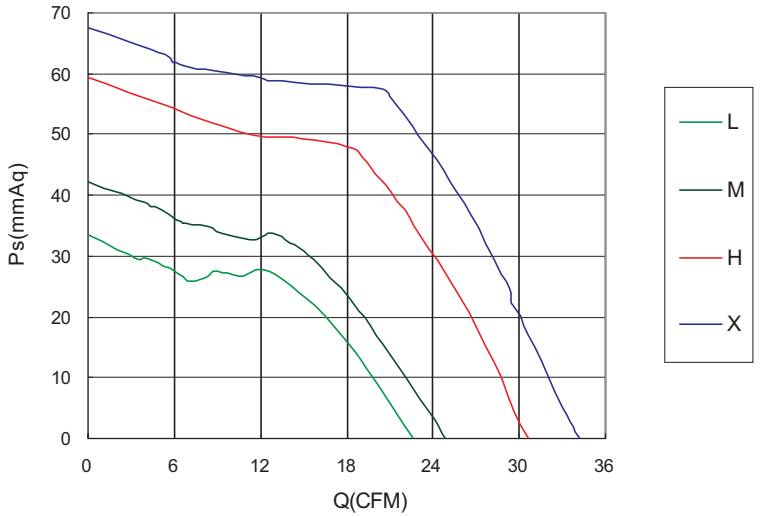

OUTLINE(mm)

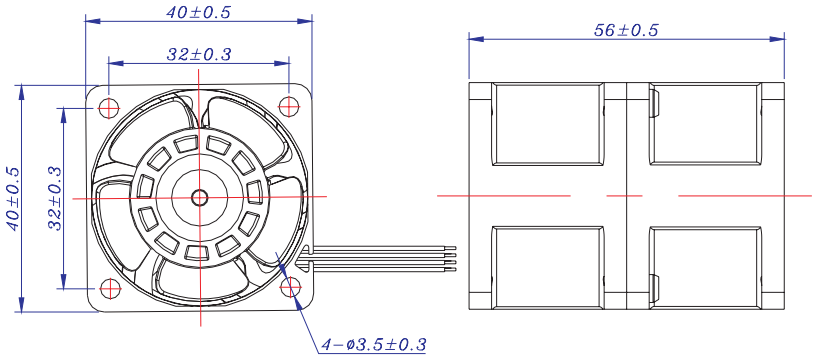

Note:

①-Reference standard: IEC 61000-4-2

②-Reference standard: UL 1446

Item No.	Operating Voltage	Maximum Air Flow		Maximum Air Pressure		Speed	Rated Current	Input Power	Noise	Weight
	(V)	(CMM)	(CFM)	(mmAq)	(inchAq)	(rpm)	(A)	(W)	dB(A)	(g)
MG(1)4012LB-(2)56	12	0.640	22.60	33.60	1.320	14,000/11,000	0.90	10.80	57.0	95
MG(1)4012MB-(2)56	12	0.700	24.90	42.30	1.660	16,000/11,500	1.20	14.40	59.5	95
MG(1)T4012HB-(2)56	12	0.860	30.60	59.50	2.340	18,500/15,500	1.50	18.00	63.5	95
MG(1)T4012XB-(2)56	12	0.970	34.20	67.60	2.660	20,000/17,500	2.00	24.00	67.8	95

Remarks:

(1)-Electric Characteristics:

A: Standard 2-Pin; **T**: Frequency Generation 3-Pin or more.

(2)-Function:

A: None Automatic Restart;
O: Automatic Restart & Locked Current Protection;
R: Rotate Detection Automatic Restart & Locked Current Protection;
S: Thermo-Control Speed, Automatic Restart & Locked Current Protection;
W: Pulse Width Modulation & Automatic Restart & Locked Current Protection (PWM).

The spec is for reference only, it's subject to change without any prior notice

50x50x15mm series

Bearing Type	☑ 2 Ball	☐ Sleeve	☑ Rifle	☑ FDB
Speed Control	☑ Voltage	☐ Temperature	☑ PWM	
	☐ ±5% Speed tolerance		☑ ±10% Speed tolerance	
Frame Type	☑ 4 Screw	☐ 8 Screw		
Signal output	☑ Alarm Signal	☑ Tacho Signal		
Protection	☑ Lock	☑ Reverse	☐ Over Voltage	☐ Over heat
ESD ①	☐ Class Ⅰ	☐ Class Ⅱ	☑ Class Ⅲ	
Insulation ②	☑ Class A	☐ Class B	☐ Class C	☐ Class F
Safety	☑ UL	☑ TUV	☑ CE	☐ VDE
Motor type	☑ Uni-phase	☑ 2 phase	☐ 3 phase	

AIR FLOW/STATIC-PRESSURE

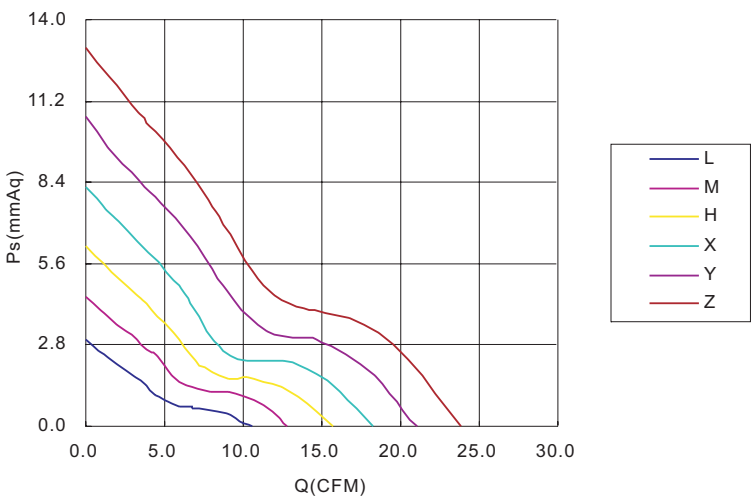

OUTLINE(mm)

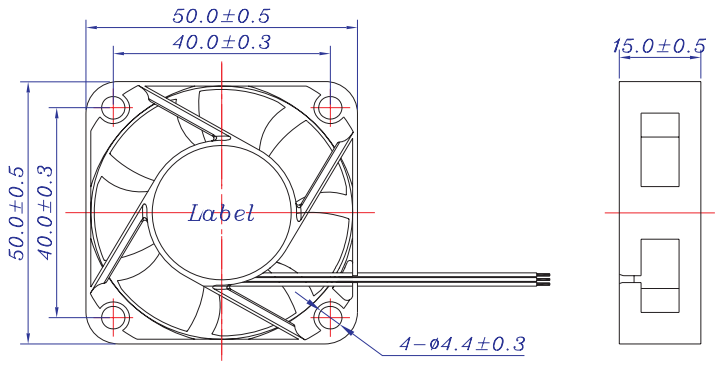

Note:

①-Reference standard: IEC 61000-4-2

②-Reference standard: UL 1446

Item No.	Operating Voltage	Maximum Air Flow		Maximum Air Pressure		Speed	Rated Current	Input Power	Noise	Weight
	(V)	(CMM)	(CFM)	(mmAq)	(inchAq)	(rpm)	(A)	(W)	dB(A)	(g)
MG(1)5005LR-(2)15	5	0.300	10.58	2.97	0.117	4,000	0.17	0.85	26.5	29
MG(1) 5005MR-(2)15	5	0.363	12.82	4.47	0.176	5,000	0.25	1.25	29.7	29
MG(1) 5005HR-(2)15	5	0.444	15.68	6.23	0.245	6,000	0.33	1.65	33.5	29
MG(1) 5005XR-(2)15	5	0.519	18.31	8.26	0.325	7,000	0.50	2.50	37.6	29
MG(1)5005LB-(2)15	5	0.300	10.58	2.97	0.117	4,000	0.17	0.85	27.4	29
MG(1) 5005MB-(2)15	5	0.363	12.82	4.47	0.176	5,000	0.25	1.25	31.0	29
MG(1) 5005HB-(2)15	5	0.444	15.68	6.23	0.245	6,000	0.33	1.65	34.7	29
MG(1) 5005XB-(2)15	5	0.519	18.31	8.26	0.325	7,000	0.50	2.50	38.9	29
MG(1)5012LR-(2)15	12	0.300	10.58	2.97	0.117	4,000	0.07	0.84	26.5	29
MG(1) 5012MR-(2)15	12	0.363	12.82	4.47	0.176	5,000	0.10	1.20	29.7	29
MG(1) 5012HR-(2)15	12	0.444	15.68	6.23	0.245	6,000	0.14	1.68	33.5	29
MG(1) 5012XR-(2)15	12	0.519	18.31	8.26	0.325	7,000	0.20	2.40	37.6	29
MG(1) 5012YR-(2)15	12	0.595	21.02	10.66	0.420	8,000	0.26	3.12	41.4	29
MG(1)5012LB-(2)15	12	0.300	10.58	2.97	0.117	4,000	0.07	0.84	27.4	29
MG(1) 5012MB-(2)15	12	0.363	12.82	4.47	0.176	5,000	0.10	1.20	31.0	29
MG(1) 5012HB-(2)15	12	0.444	15.68	6.23	0.245	6,000	0.14	1.68	34.7	29
MG(1) 5012XB-(2)15	12	0.519	18.31	8.26	0.325	7,000	0.20	2.40	38.9	29
MG(1) 5012YB-(2)15	12	0.595	21.02	10.66	0.420	8,000	0.26	3.12	42.7	29
MG(1) 5012ZB-(2)15	12	0.675	23.84	13.02	0.513	9,000	0.35	4.20	45.3	29

Remarks:

(1)-Electric Characteristics:

A: Standard 2-Pin; **T**: Frequency Generation 3-Pin or more.

(2)-Function:

A: None Automatic Restart;
O: Automatic Restart & Locked Current Protection;
R: Rotate Detection Automatic Restart & Locked Current Protection;
S: Thermo-Control Speed, Automatic Restart & Locked Current Protection;
W: Pulse Width Modulation & Automatic Restart & Locked Current Protection (PWM).

The spec is for reference only, it's subject to change without any prior notice

50x50x20mm series A

Bearing Type	☑ 2 Ball	☐ Sleeve	☑ Rifle	☑ FDB
Speed Control	☑ Voltage	☐ Temperature	☑ PWM	
	☐ ±5% Speed tolerance		☑ ±10% Speed tolerance	
Frame Type	☑ 4 Screw	☐ 8 Screw		
Signal output	☑ Alarm Signal	☑ Tacho Signal		
Protection	☑ Lock	☐ Reverse	☐ Over Voltage	☐ Over heat
ESD ①	☐ Class Ⅰ	☐ Class Ⅱ	☑ Class Ⅲ	
Insulation ②	☑ Class A	☐ Class B	☐ Class C	☐ Class F
Safety	☑ UL	☑ TUV	☑ CE	☐ VDE
Motor type	☑ Uni-phase	☑ 2 phase	☐ 3 phase	

AIR FLOW/STATIC-PRESSURE

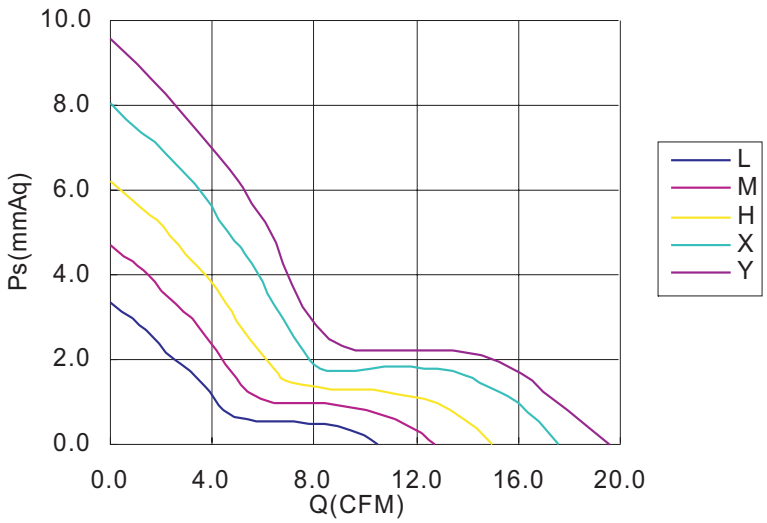

OUTLINE(mm)

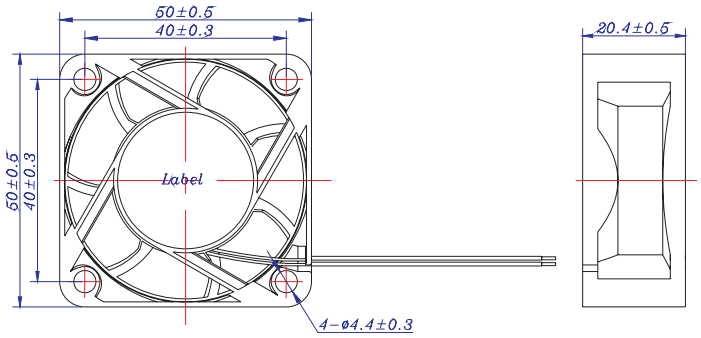

Note:

①-Reference standard: IEC 61000-4-2

②-Reference standard: UL 1446

Item No.	Operating Voltage	Maximum Air Flow		Maximum Air Pressure		Speed	Rated Current	Input Power	Noise	Weight
	(V)	(CMM)	(CFM)	(mmAq)	(inchAq)	(rpm)	(A)	(W)	dB(A)	(g)
MG(1)5012LF-(2)20	12	0.297	10.49	3.35	0.132	4,000	0.09	1.08	27.7	57
MG(1)5012MF-(2)20	12	0.360	12.71	4.72	0.186	4,800	0.12	1.44	31.0	57
MG(1)5012HF-(2)20	12	0.425	15.01	6.21	0.244	5,600	0.18	2.16	34.2	57
MG(1)5012XF-(2)20	12	0.497	17.56	8.04	0.317	6,400	0.24	2.88	38.7	57
MG(1)5012YF-(2)20	12	0.553	19.53	9.58	0.377	7,000	0.30	3.60	41.5	57
MG(1)5012LR-(2)20	12	0.297	10.49	3.35	0.132	4,000	0.09	1.08	28.5	53
MG(1)5012MR-(2)20	12	0.360	12.71	4.72	0.186	4,800	0.12	1.44	32.5	53
MG(1)5012HR-(2)20	12	0.425	15.01	6.21	0.244	5,600	0.18	2.16	35.9	53
MG(1)5012XR-(2)20	12	0.497	17.56	8.04	0.317	6,400	0.24	2.88	39.6	53
MG(1)5012YR-(2)20	12	0.553	19.53	9.58	0.377	7,000	0.30	3.60	42.8	53
MG(1)5012LB-(2)20	12	0.297	10.49	3.35	0.132	4,000	0.09	1.08	28.6	56
MG(1)5012MB-(2)20	12	0.360	12.71	4.72	0.186	4,800	0.12	1.44	33.2	56
MG(1)5012HB-(2)20	12	0.425	15.01	6.21	0.244	5,600	0.18	2.16	36.8	56
MG(1)5012XB-(2)20	12	0.497	17.56	8.04	0.317	6,400	0.24	2.88	41.2	56
MG(1)5012YB-(2)20	12	0.553	19.53	9.58	0.377	7,000	0.30	3.60	43.4	56
MG(1)5024LF-(2)20	24	0.297	10.49	3.35	0.132	4,000	0.06	1.44	27.7	57
MG(1)5024MF-(2)20	24	0.360	12.71	4.72	0.186	4,800	0.08	1.92	31.0	57
MG(1)5024HF-(2)20	24	0.425	15.01	6.21	0.244	5,600	0.10	2.40	34.2	57
MG(1)5024XF-(2)20	24	0.497	17.56	8.04	0.317	6,400	0.15	3.60	38.7	57
MG(1)5024YF-(2)20	24	0.553	19.53	9.58	0.377	7,000	0.20	4.80	41.5	57
MG(1)5024LR-(2)20	24	0.297	10.49	3.35	0.132	4,000	0.06	1.44	28.5	53
MG(1)5024MR-(2)20	24	0.360	12.71	4.72	0.186	4,800	0.08	1.92	32.5	53
MG(1)5024HR-(2)20	24	0.425	15.01	6.21	0.244	5,600	0.10	2.40	35.9	53
MG(1)5024XR-(2)20	24	0.497	17.56	8.04	0.317	6,400	0.15	3.60	39.6	53
MG(1)5024YR-(2)20	24	0.553	19.53	9.58	0.377	7,000	0.20	4.80	42.8	53
MG(1)5024LB-(2)20	24	0.297	10.49	3.35	0.132	4,000	0.06	1.44	28.6	56
MG(1)5024MB-(2)20	24	0.360	12.71	4.72	0.186	4,800	0.08	1.92	33.2	56
MG(1)5024HB-(2)20	24	0.425	15.01	6.21	0.244	5,600	0.10	2.40	36.8	56
MG(1)5024XB-(2)20	24	0.497	17.56	8.04	0.317	6,400	0.15	3.60	41.2	56
MG(1)5024YB-(2)20	24	0.553	19.53	9.58	0.377	7,000	0.20	4.80	43.4	56

Remarks:

(1)-Electric Characteristics:

A: Standard 2-Pin; **T**: Frequency Generation 3-Pin or more.

(2)-Function:

A: None Automatic Restart;
O: Automatic Restart & Locked Current Protection;
R: Rotate Detection Automatic Restart & Locked Current Protection;
S: Thermo-Control Speed, Automatic Restart & Locked Current Protection;
W: Pulse Width Modulation & Automatic Restart & Locked Current Protection (PWM).

The spec is for reference only, it's subject to change without any prior notice

50x50x20mm series B

Bearing Type	☑ 2 Ball	☐ Sleeve	☑ Rifle	☑ FDB
Speed Control	☑ Voltage	☐ Temperature	☑ PWM	
	☐ ±5% Speed tolerance		☑ ±10% Speed tolerance	
Frame Type	☑ 4 Screw	☐ 8 Screw		
Signal output	☑ Alarm Signal	☑ Tacho Signal		
Protection	☑ Lock	☑ Reverse	☐ Over Voltage	☐ Over heat
ESD ①	☐ Class Ⅰ	☐ Class Ⅱ	☑ Class Ⅲ	
Insulation ②	☑ Class A	☐ Class B	☐ Class C	☐ Class F
Safety	☑ UL	☑ TUV	☑ CE	☐ VDE
Motor type	☑ Uni-phase	☑ 2 phase	☐ 3 phase	

AIR FLOW/STATIC-PRESSURE

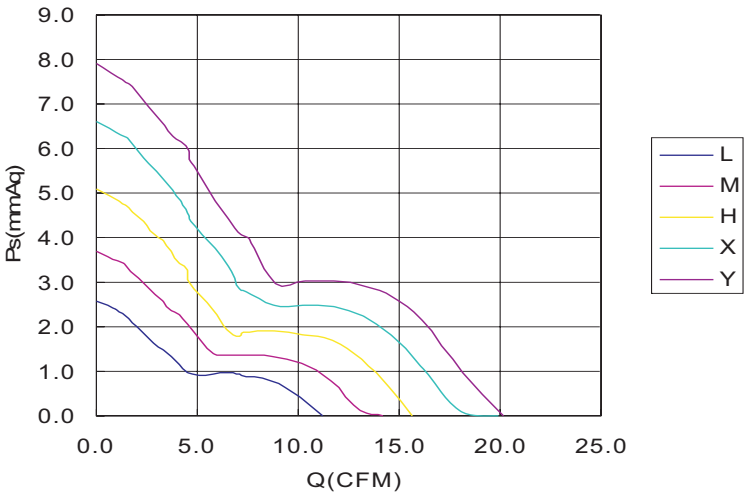

OUTLINE(mm)

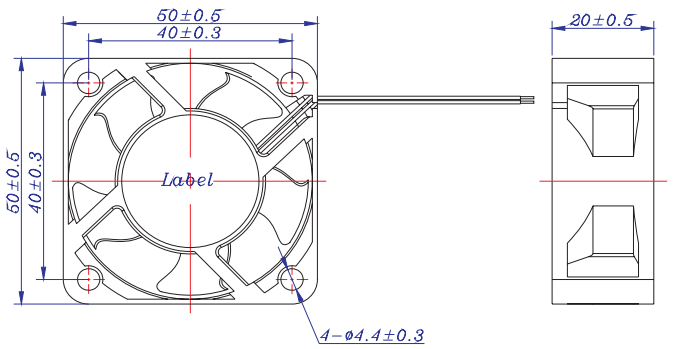

Note:

①-Reference standard: IEC 61000-4-2

②-Reference standard: UL 1446

Item No.	Operating Voltage	Maximum Air Flow		Maximum Air Pressure		Speed	Rated Current	Input Power	Noise	Weight
	(V)	(CMM)	(CFM)	(mmAq)	(inchAq)	(rpm)	(A)	(W)	dB(A)	(g)
MG(1)5012LF-(2)20	12	0.318	11.24	2.57	0.101	4,000	0.09	1.08	26.0	42
MG(1)5012MF-(2)20	12	0.402	14.19	3.70	0.146	4,800	0.12	1.44	28.8	42
MG(1)5012HF-(2)20	12	0.444	15.67	5.09	0.200	5,600	0.18	2.16	31.9	42
MG(1)5012XF-(2)20	12	0.565	19.93	6.61	0.260	6,400	0.24	2.88	35.2	42
MG(1)5012YF-(2)20	12	0.571	20.14	7.91	0.311	7,000	0.30	3.60	37.4	42
MG(1)5012LR-(2)20	12	0.318	11.24	2.57	0.101	4,000	0.09	1.08	26.2	42
MG(1)5012MR-(2)20	12	0.402	14.19	3.70	0.146	4,800	0.12	1.44	29.0	42
MG(1)5012HR-(2)20	12	0.444	15.67	5.09	0.200	5,600	0.18	2.16	32.1	42
MG(1)5012XR-(2)20	12	0.565	19.93	6.61	0.260	6,400	0.24	2.88	35.4	42
MG(1)5012YR-(2)20	12	0.571	20.14	7.91	0.311	7,000	0.30	3.60	37.6	42
MG(1)5012LB-(2)20	12	0.318	11.24	2.57	0.101	4,000	0.09	1.08	26.4	42
MG(1)5012MB-(2)20	12	0.402	14.19	3.70	0.146	4,800	0.12	1.44	29.2	42
MG(1)5012HB-(2)20	12	0.444	15.67	5.09	0.200	5,600	0.18	2.16	32.3	42
MG(1)5012XB-(2)20	12	0.565	19.93	6.61	0.260	6,400	0.24	2.88	35.6	42
MG(1)5012YB-(2)20	12	0.571	20.14	7.91	0.311	7,000	0.30	3.60	37.8	42
MG(1)5024LF-(2)20	24	0.318	11.24	2.57	0.101	4,000	0.06	1.44	26.0	42
MG(1)5024MF-(2)20	24	0.402	14.19	3.70	0.146	4,800	0.08	1.92	28.8	42
MG(1)5024HF-(2)20	24	0.444	15.67	5.09	0.200	5,600	0.10	2.40	31.9	42
MG(1)5024XF-(2)20	24	0.565	19.93	6.61	0.260	6,400	0.15	3.60	35.2	42
MG(1)5024YF-(2)20	24	0.571	20.14	7.91	0.311	7,000	0.20	4.80	37.4	42
MG(1)5024LR-(2)20	24	0.318	11.24	2.57	0.101	4,000	0.06	1.44	26.2	42
MG(1)5024MR-(2)20	24	0.402	14.19	3.70	0.146	4,800	0.08	1.92	29.0	42
MG(1)5024HR-(2)20	24	0.444	15.67	5.09	0.200	5,600	0.10	2.40	32.1	42
MG(1)5024XR-(2)20	24	0.565	19.93	6.61	0.260	6,400	0.15	3.60	35.4	42
MG(1)5024YR-(2)20	24	0.571	20.14	7.91	0.311	7,000	0.20	4.80	37.6	42
MG(1)5024LB-(2)20	24	0.318	11.24	2.57	0.101	4,000	0.06	1.44	26.4	42
MG(1)5024MB-(2)20	24	0.402	14.19	3.70	0.146	4,800	0.08	1.92	29.2	42
MG(1)5024HB-(2)20	24	0.444	15.67	5.09	0.200	5,600	0.10	2.40	32.3	42
MG(1)5024XB-(2)20	24	0.565	19.93	6.61	0.260	6,400	0.15	3.60	35.6	42
MG(1)5024YB-(2)20	24	0.571	20.14	7.91	0.311	7,000	0.20	4.80	37.8	42

Remarks:

(1)-Electric Characteristics:

A: Standard 2-Pin; **T**: Frequency Generation 3-Pin or more.

(2)-Function:

A: None Automatic Restart;
O: Automatic Restart & Locked Current Protection;
R: Rotate Detection Automatic Restart & Locked Current Protection;
S: Thermo-Control Speed, Automatic Restart & Locked Current Protection;
W: Pulse Width Modulation & Automatic Restart & Locked Current Protection (PWM).

The spec is for reference only, it's subject to change without any prior notice

60x60x10mm series A

Bearing Type	☑ 2 Ball	☐ Sleeve	☑ Rifle	☑ FDB
Speed Control	☑ Voltage	☑ Temperature	☑ PWM	
	☐ ±5% Speed tolerance		☑ ±10% Speed tolerance	
Frame Type	☑ 4 Screw	☐ 8 Screw		
Signal output	☑ Alarm Signal	☑ Tacho Signal		
Protection	☑ Lock	☑ Reverse	☐ Over Voltage	☐ Over heat
ESD ①	☐ Class Ⅰ	☐ Class Ⅱ	☑ Class Ⅲ	
Insulation ②	☑ Class A	☐ Class B	☐ Class C	☐ Class F
Safety	☑ UL	☑ TUV	☑ CE	☐ VDE
Motor type	☑ Uni-phase	☑ 2 phase	☐ 3 phase	

AIR FLOW/STATIC-PRESSURE

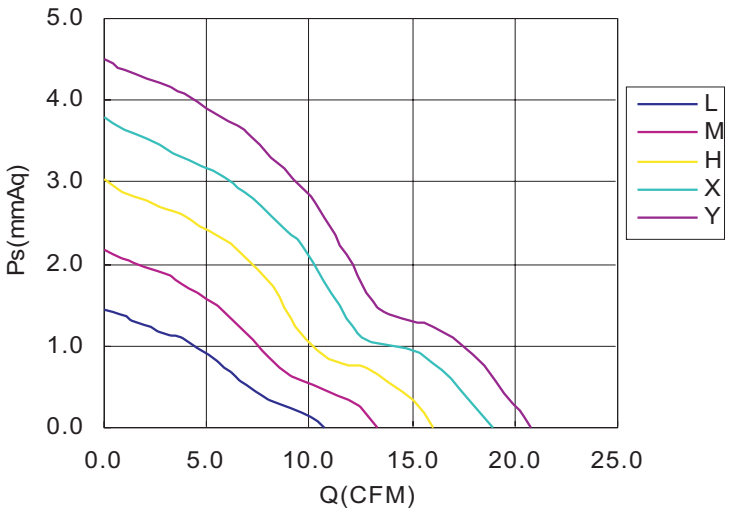

OUTLINE(mm)

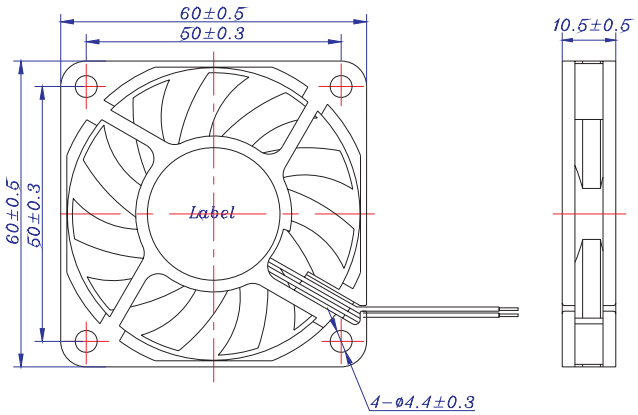

Note:

①-Reference standard: IEC 61000-4-2

②-Reference standard: UL 1446

Item No.	Operating Voltage	Maximum Air Flow		Maximum Air Pressure		Speed	Rated Current	Input Power	Noise	Weight
	(V)	(CMM)	(CFM)	(mmAq)	(inchAq)	(rpm)	(A)	(W)	dB(A)	(g)
MG(1)6005LR-(2)10	5	0.304	10.74	1.45	0.057	3,000	0.16	0.80	26.7	30
MG(1)6005MR-(2)10	5	0.376	13.27	2.18	0.086	3,600	0.25	1.25	29.8	30
MG(1)6005HR-(2)10	5	0.452	15.97	3.03	0.119	4,200	0.35	1.75	33.5	30
MG(1)6005LB-(2)10	5	0.304	10.74	1.45	0.057	3,000	0.16	0.80	27.1	29
MG(1)6005MB-(2)10	5	0.376	13.27	2.18	0.086	3,600	0.25	1.25	30.2	29
MG(1)6005HB-(2)10	5	0.452	15.97	3.03	0.119	4,200	0.35	1.75	33.9	29
MG(1)6012LR-(2)10	12	0.304	10.74	1.45	0.057	3,000	0.09	1.08	26.7	30
MG(1)6012MR-(2)10	12	0.376	13.27	2.18	0.086	3,600	0.12	1.44	29.8	30
MG(1)6012HR-(2)10	12	0.452	15.97	3.03	0.119	4,200	0.17	2.04	33.5	30
MG(1)6012XR-(2)10	12	0.537	18.96	3.80	0.150	4,800	0.23	2.76	37.0	30
MG(1)6012YR-(2)10	12	0.588	20.76	4.51	0.178	5,400	0.30	3.60	40.2	30
MG(1)6012LB-(2)10	12	0.304	10.74	1.45	0.057	3,000	0.09	1.08	27.1	29
MG(1)6012MB-(2)10	12	0.376	13.27	2.18	0.086	3,600	0.12	1.44	30.2	29
MG(1)6012HB-(2)10	12	0.452	15.97	3.03	0.119	4,200	0.17	2.04	33.9	29
MG(1)6012XB-(2)10	12	0.537	18.96	3.80	0.150	4,800	0.23	2.76	37.2	29
MG(1)6012YB-(2)10	12	0.588	20.76	4.51	0.178	5,400	0.30	3.60	40.3	29
MG(1)6024LR-(2)10	24	0.304	10.74	1.45	0.057	3,000	0.08	1.92	26.7	30
MG(1)6024MR-(2)10	24	0.376	13.27	2.18	0.086	3,600	0.11	2.64	29.8	30
MG(1)6024HR-(2)10	24	0.452	15.97	3.03	0.119	4,200	0.13	3.12	33.5	30
MG(1)6024XR-(2)10	24	0.537	18.96	3.80	0.150	4,800	0.19	4.56	37.0	30
MG(1)6024YR-(2)10	24	0.588	20.76	4.51	0.178	5,400	0.22	5.28	40.2	30
MG(1)6024LB-(2)10	24	0.304	10.74	1.45	0.057	3,000	0.08	1.92	27.1	29
MG(1)6024MB-(2)10	24	0.376	13.27	2.18	0.086	3,600	0.11	2.64	30.2	29
MG(1)6024HB-(2)10	24	0.452	15.97	3.03	0.119	4,200	0.13	3.12	33.9	29
MG(1)6024XB-(2)10	24	0.537	18.96	3.80	0.150	4,800	0.19	4.56	37.2	29
MG(1)6024YB-(2)10	24	0.588	20.76	4.51	0.178	5,400	0.22	5.28	40.3	29

Remarks:

(1)-Electric Characteristics:

A: Standard 2-Pin; **T**: Frequency Generation 3-Pin or more.

(2)-Function:

A: None Automatic Restart;
O: Automatic Restart & Locked Current Protection;
R: Rotate Detection Automatic Restart & Locked Current Protection;
S: Thermo-Control Speed, Automatic Restart & Locked Current Protection;
W: Pulse Width Modulation & Automatic Restart & Locked Current Protection (PWM).

The spec is for reference only, it's subject to change without any prior notice

60x60x15mm series

Bearing Type	☑ 2 Ball	☐ Sleeve	☑ Rifle	☐ FDB
Speed Control	☑ Voltage	☑ Temperature	☑ PWM	
	☐ ±5% Speed tolerance		☑ ±10% Speed tolerance	
Frame Type	☑ 4 Screw	☐ 8 Screw		
Signal output	☑ Alarm Signal	☑ Tacho Signal		
Protection	☑ Lock	☑ Reverse	☐ Over Voltage	☐ Over heat
ESD ①	☐ Class Ⅰ	☐ Class Ⅱ	☑ Class Ⅲ	
Insulation ②	☑ Class A	☐ Class B	☐ Class C	☐ Class F
Safety	☑ UL	☑ TUV	☑ CE	☐ VDE
Motor type	☑ Uni-phase	☑ 2 phase	☐ 3 phase	

AIR FLOW/STATIC-PRESSURE

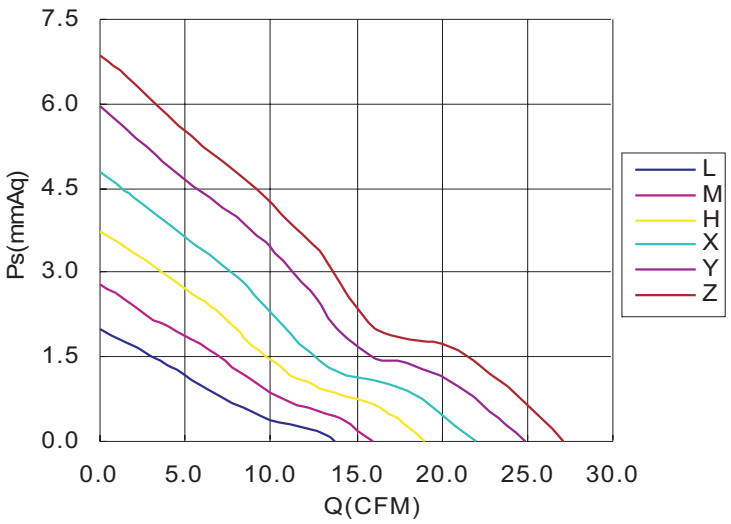

OUTLINE(mm)

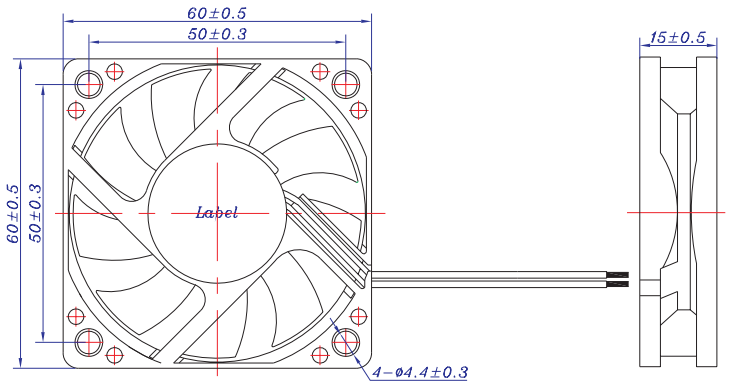

Note:

①-Reference standard: IEC 61000-4-2

②-Reference standard: UL 1446

Item No.	Operating Voltage	Maximum Air Flow		Maximum Air Pressure		Speed	Rated Current	Input Power	Noise	Weight
	(V)	(CMM)	(CFM)	(mmAq)	(inchAq)	(rpm)	(A)	(W)	dB(A)	(g)
MG(1)6012LR-(2)15	12	0.391	13.80	2.00	0.079	3,000	0.12	1.44	27.1	38
MG(1)6012MR-(2)15	12	0.454	16.03	2.78	0.109	3,600	0.18	2.16	30.1	38
MG(1)6012HR-(2)15	12	0.537	18.96	3.74	0.147	4,200	0.23	2.76	34.3	38
MG(1)6012XR-(2)15	12	0.623	22.00	4.77	0.188	4,800	0.27	3.24	37.8	38
MG(1)6012YR-(2)15	12	0.704	24.86	5.97	0.235	5,400	0.37	4.44	41.3	38
MG(1)6012ZR-(2)15	12	0.767	27.09	6.85	0.270	5,800	0.43	5.16	42.6	38
MG(1)6012LB-(2)15	12	0.391	13.80	2.00	0.079	3,000	0.12	1.44	27.6	39
MG(1)6012MB-(2)15	12	0.454	16.03	2.78	0.109	3,600	0.18	2.16	30.9	39
MG(1)6012HB-(2)15	12	0.537	18.96	3.74	0.147	4,200	0.23	2.76	35.0	39
MG(1)6012XB-(2)15	12	0.623	22.00	4.77	0.188	4,800	0.27	3.24	38.0	39
MG(1)6012YB-(2)15	12	0.704	24.86	5.97	0.235	5,400	0.37	4.44	41.7	39
MG(1)6012ZB-(2)15	12	0.767	27.09	6.85	0.270	5,800	0.43	5.16	43.0	39
MG(1)6024LR-(2)15	24	0.391	13.80	2.00	0.079	3,000	0.10	2.40	27.1	38
MG(1)6024MR-(2)15	24	0.454	16.03	2.78	0.109	3,600	0.13	3.12	30.1	38
MG(1)6024HR-(2)15	24	0.537	18.96	3.74	0.147	4,200	0.16	3.84	34.3	38
MG(1)6024XR-(2)15	24	0.623	22.00	4.77	0.188	4,800	0.21	5.04	37.8	38
MG(1)6024YR-(2)15	24	0.704	24.86	5.97	0.235	5,400	0.26	6.24	41.3	38
MG(1)6024ZR-(2)15	24	0.767	27.09	6.85	0.270	5,800	0.30	7.20	42.6	38
MG(1)6024LB-(2)15	24	0.391	13.80	2.00	0.079	3,000	0.10	2.40	27.6	39
MG(1)6024MB-(2)15	24	0.454	16.03	2.78	0.109	3,600	0.13	3.12	30.9	39
MG(1)6024HB-(2)15	24	0.537	18.96	3.74	0.147	4,200	0.16	3.84	35.0	39
MG(1)6024XB-(2)15	24	0.623	22.00	4.77	0.188	4,800	0.21	5.04	38.0	39
MG(1)6024YB-(2)15	24	0.704	24.86	5.97	0.235	5,400	0.26	6.24	41.7	39
MG(1)6024ZB-(2)15	24	0.767	27.09	6.85	0.270	5,800	0.30	7.20	43.0	39

Remarks:

(1)-Electric Characteristics:

A: Standard 2-Pin; **T**: Frequency Generation 3-Pin or more.

(2)-Function:

A: None Automatic Restart;
O: Automatic Restart & Locked Current Protection;
R: Rotate Detection Automatic Restart & Locked Current Protection;
S: Thermo-Control Speed, Automatic Restart & Locked Current Protection;
W: Pulse Width Modulation & Automatic Restart & Locked Current Protection (PWM).

The spec is for reference only, it's subject to change without any prior notice

60x60x25mm series A

Bearing Type	☑ 2 Ball	☑ Sleeve	☑ Rifle	☑ FDB
Speed Control	☑ Voltage	☐ Temperature	☑ PWM	
	☐ ±5% Speed tolerance		☑ ±10% Speed tolerance	
Frame Type	☑ 4 Screw	☑ 8 Screw		
Signal output	☑ Alarm Signal	☑ Tacho Signal		
Protection	☑ Lock	☑ Reverse	☐ Over Voltage	☐ Over heat
ESD ①	☐ Class Ⅰ	☐ Class Ⅱ	☑ Class Ⅲ	
Insulation ②	☑ Class A	☐ Class B	☐ Class C	☐ Class F
Safety	☑ UL	☑ TUV	☑ CE	☐ VDE
Motor type	☑ Uni-phase	☑ 2 phase	☐ 3 phase	

AIR FLOW/STATIC-PRESSURE

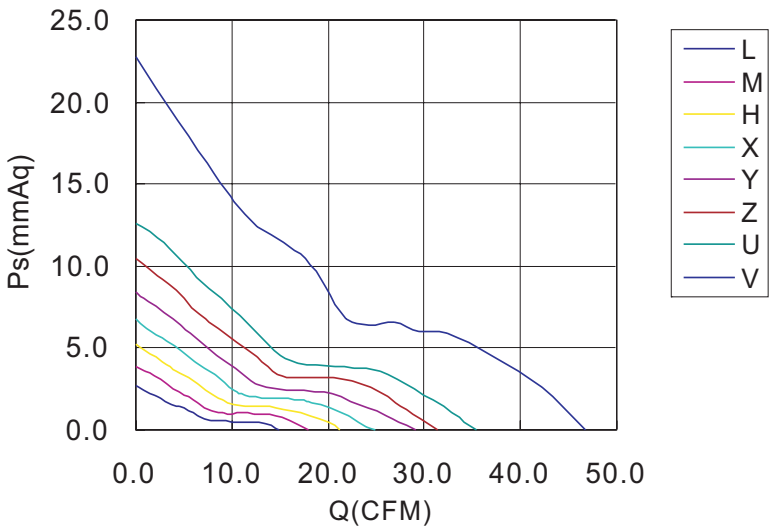

OUTLINE(mm)

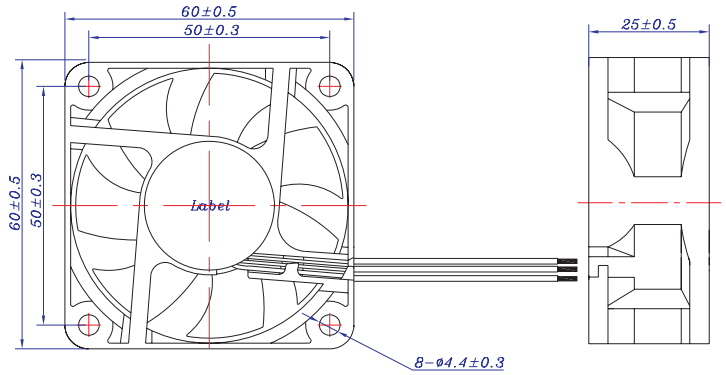

Note:

①-Reference standard: IEC 61000-4-2

②-Reference standard: UL 1446

Item No.	Operating Voltage	Maximum Air Flow		Maximum Air Pressure		Speed	Rated Current	Input Power	Noise	Weight
	(V)	(CMM)	(CFM)	(mmAq)	(inchAq)	(rpm)	(A)	(W)	dB(A)	(g)
MG(1)6005LR-(2)25	5	0.421	14.87	2.69	0.106	3,000	0.22	1.10	25.8	63
MG(1)6005MR-(2)25	5	0.509	17.96	3.86	0.152	3,600	0.30	1.50	27.6	63
MG(1)6005HR-(2)25	5	0.601	21.20	5.20	0.205	4,200	0.38	1.90	30.7	63
MG(1)6005LB-(2)25	5	0.421	14.87	2.69	0.106	3,000	0.22	1.10	25.9	59
MG(1)6005MB-(2)25	5	0.509	17.96	3.86	0.152	3,600	0.30	1.50	28.0	59
MG(1)6005HB-(2)25	5	0.601	21.20	5.20	0.205	4,200	0.38	1.90	31.1	59
MG(1)6012LR-(2)25	12	0.421	14.87	2.69	0.106	3,000	0.11	1.32	25.8	63
MG(1)6012MR-(2)25	12	0.509	17.96	3.86	0.152	3,600	0.13	1.56	27.6	63
MG(1)6012HR-(2)25	12	0.601	21.20	5.20	0.205	4,200	0.17	2.04	30.7	63
MG(1)6012XR-(2)25	12	0.706	24.93	6.81	0.268	4,800	0.20	2.40	34.1	63
MG(1)6012YR-(2)25	12	0.826	29.16	8.41	0.331	5,400	0.26	3.12	36.6	63
MG(1)6012ZR-(2)25	12	0.889	31.38	10.47	0.412	6,000	0.31	3.72	39.7	63
MG(1)6012UR-(2)25	12	1.006	35.50	12.60	0.496	6,800	0.38	4.56	42.8	63
MG(1)6012LB-(2)25	12	0.421	14.87	2.69	0.106	3,000	0.11	1.32	25.9	59
MG(1)6012MB-(2)25	12	0.509	17.96	3.86	0.152	3,600	0.13	1.56	28.0	59
MG(1)6012HB-(2)25	12	0.601	21.20	5.20	0.205	4,200	0.17	2.04	31.1	59
MG(1)6012XB-(2)25	12	0.706	24.93	6.81	0.268	4,800	0.20	2.40	34.2	59
MG(1)6012YB-(2)25	12	0.826	29.16	8.41	0.331	5,400	0.26	3.12	37.0	59
MG(1)6012ZB-(2)25	12	0.889	31.38	10.47	0.412	6,000	0.31	3.72	39.8	59
MG(1)6012UB-(2)25	12	1.006	35.50	12.60	0.496	6,800	0.38	4.56	43.1	59
MG(1)6012VB-(2)25	12	1.326	46.81	22.80	0.898	9,000	0.90	10.80	53.4	59
MG(1)6024LR-(2)25	24	0.421	14.87	2.69	0.106	3,000	0.09	2.16	25.8	63
MG(1)6024MR-(2)25	24	0.509	17.96	3.86	0.152	3,600	0.12	2.88	27.6	63
MG(1)6024HR-(2)25	24	0.601	21.20	5.20	0.205	4,200	0.14	3.36	30.7	63
MG(1)6024XR-(2)25	24	0.706	24.93	6.81	0.268	4,800	0.17	4.08	34.1	63
MG(1)6024YR-(2)25	24	0.826	29.16	8.41	0.331	5,400	0.20	4.80	36.6	63
MG(1)6024ZR-(2)25	24	0.889	31.38	10.47	0.412	6,000	0.22	5.28	39.7	63
MG(1)6024UR-(2)25	24	1.006	35.50	12.60	0.496	6,800	0.29	6.96	42.8	63
MG(1)6024LB-(2)25	24	0.421	14.87	2.69	0.106	3,000	0.09	2.16	25.9	59
MG(1)6024MB-(2)25	24	0.509	17.96	3.86	0.152	3,600	0.12	2.88	28.0	59
MG(1)6024HB-(2)25	24	0.601	21.20	5.20	0.205	4,200	0.14	3.36	31.1	59
MG(1)6024XB-(2)25	24	0.706	24.93	6.81	0.268	4,800	0.17	4.08	34.2	59
MG(1)6024YB-(2)25	24	0.826	29.16	8.41	0.331	5,400	0.20	4.80	37.0	59
MG(1)6024ZB-(2)25	24	0.889	31.38	10.47	0.412	6,000	0.22	5.28	39.8	59
MG(1)6024UB-(2)25	24	1.006	35.50	12.60	0.496	6,800	0.29	6.96	43.1	59

Remarks:

(1)-Electric Characteristics:

A: Standard 2-Pin; **T**: Frequency Generation 3-Pin or more.

(2)-Function:

A: None Automatic Restart;
O: Automatic Restart & Locked Current Protection;
R: Rotate Detection Automatic Restart & Locked Current Protection;
S: Thermo-Control Speed, Automatic Restart & Locked Current Protection;
W: Pulse Width Modulation & Automatic Restart & Locked Current Protection (PWM).

The spec is for reference only, it's subject to change without any prior notice

60x60x25mm series A

Bearing Type	☑ 2 Ball	☑ Sleeve	☑ Rifle	☑ FDB
Speed Control	☑ Voltage	☐ Temperature	☑ PWM	
	☐ ±5% Speed tolerance		☑ ±10% Speed tolerance	
Frame Type	☑ 4 Screw	☑ 8 Screw		
Signal output	☑ Alarm Signal	☑ Tacho Signal		
Protection	☑ Lock	☑ Reverse	☐ Over Voltage	☐ Over heat
ESD ①	☐ Class Ⅰ	☐ Class Ⅱ	☑ Class Ⅲ	
Insulation ②	☑ Class A	☐ Class B	☐ Class C	☐ Class F
Safety	☑ UL	☑ TUV	☑ CE	☐ VDE
Motor type	☑ Uni-phase	☑ 2 phase	☐ 3 phase	

AIR FLOW/STATIC-PRESSURE

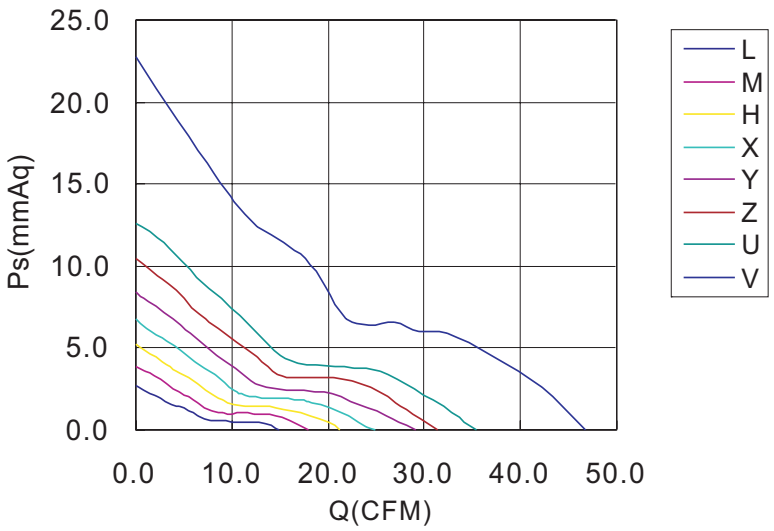

OUTLINE(mm)

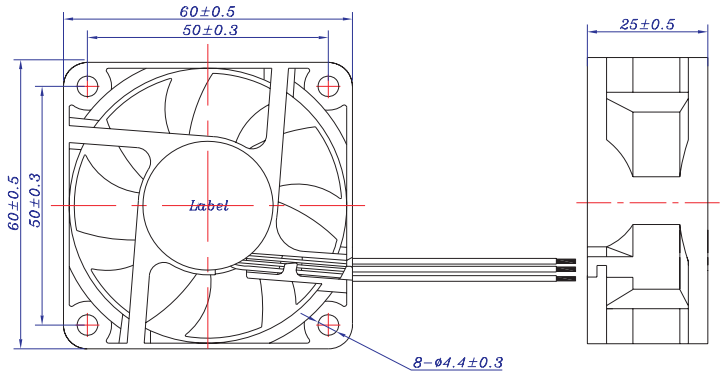

Note:

①-Reference standard: IEC 61000-4-2

②-Reference standard: UL 1446

Item No.	Operating Voltage	Maximum Air Flow		Maximum Air Pressure		Speed	Rated Current	Input Power	Noise	Weight
	(V)	(CMM)	(CFM)	(mmAq)	(inchAq)	(rpm)	(A)	(W)	dB(A)	(g)
MG(1)6005LF-(2)25	5	0.421	14.87	2.69	0.106	3,000	0.22	1.10	25.5	59
MG(1)6005MF-(2)25	5	0.509	17.96	3.86	0.152	3,600	0.30	1.50	27.0	59
MG(1)6005HF-(2)25	5	0.601	21.20	5.20	0.205	4,200	0.38	1.90	30.2	59
MG(1)6012LF-(2)25	12	0.421	14.87	2.69	0.106	3,000	0.11	1.32	25.5	59
MG(1)6012MF-(2)25	12	0.509	17.96	3.86	0.152	3,600	0.13	1.56	27.0	59
MG(1)6012HF-(2)25	12	0.601	21.20	5.20	0.205	4,200	0.17	2.04	30.2	59
MG(1)6012XF-(2)25	12	0.706	24.93	6.81	0.268	4,800	0.20	2.40	33.6	59
MG(1)6012YF-(2)25	12	0.826	29.16	8.41	0.331	5,400	0.26	3.12	36.5	59
MG(1)6012ZF-(2)25	12	0.889	31.38	10.47	0.412	6,000	0.31	3.72	39.1	59
MG(1)6012UF-(2)25	12	1.006	35.50	12.60	0.496	6,800	0.38	4.56	42.6	59
MG(1)6024LF-(2)25	24	0.421	14.87	2.69	0.106	3,000	0.09	2.16	25.5	59
MG(1)6024MF-(2)25	24	0.509	17.96	3.86	0.152	3,600	0.12	2.88	27.0	59
MG(1)6024HF-(2)25	24	0.601	21.20	5.20	0.205	4,200	0.14	3.36	30.2	59
MG(1)6024XF-(2)25	24	0.706	24.93	6.81	0.268	4,800	0.17	4.08	33.6	59
MG(1)6024YF-(2)25	24	0.826	29.16	8.41	0.331	5,400	0.20	4.80	36.5	59
MG(1)6024ZF-(2)25	24	0.889	31.38	10.47	0.412	6,000	0.22	5.28	39.1	59
MG(1)6024UF-(2)25	24	1.006	35.50	12.60	0.496	6,800	0.29	6.96	42.6	59
MG(1)6048HF-(2)25	48	0.601	21.20	5.20	0.205	4,200	0.05	2.40	30.2	59
MG(1)6048XF-(2)25	48	0.706	24.93	6.81	0.268	4,800	0.08	3.84	33.6	59
MG(1)6048YF-(2)25	48	0.826	29.16	8.41	0.331	5,400	0.12	5.76	36.5	59
MG(1)6048ZF-(2)25	48	0.889	31.38	10.47	0.412	6,000	0.18	8.64	39.1	59
MG(1)6048HR-(2)25	48	0.601	21.20	5.20	0.205	4,200	0.05	2.40	30.7	63
MG(1)6048XR-(2)25	48	0.706	24.93	6.81	0.268	4,800	0.08	3.84	34.1	63
MG(1)6048YR-(2)25	48	0.826	29.16	8.41	0.331	5,400	0.12	5.76	36.6	63
MG(1)6048ZR-(2)25	48	0.889	31.38	10.47	0.412	6,000	0.18	8.64	39.7	63
MG(1)6048HB-(2)25	48	0.601	21.20	5.20	0.205	4,200	0.05	2.40	31.1	59
MG(1)6048XB-(2)25	48	0.706	24.93	6.81	0.268	4,800	0.08	3.84	34.2	59
MG(1)6048YB-(2)25	48	0.826	29.16	8.41	0.331	5,400	0.12	5.76	37.0	59
MG(1)6048ZB-(2)25	48	0.889	31.38	10.47	0.412	6,000	0.18	8.64	39.8	59
MG(1)6048UB-(2)25	48	1.006	35.50	12.60	0.496	6,800	0.25	12.00	42.6	59

Remarks:

(1)-Electric Characteristics:

A: Standard 2-Pin; **T**: Frequency Generation 3-Pin or more.

(2)-Function:

A: None Automatic Restart;
O: Automatic Restart & Locked Current Protection;
R: Rotate Detection Automatic Restart & Locked Current Protection;
S: Thermo-Control Speed, Automatic Restart & Locked Current Protection;
W: Pulse Width Modulation & Automatic Restart & Locked Current Protection (PWM).

The spec is for reference only, it's subject to change without any prior notice

60x60x25mm series B

Bearing Type	☑ 2 Ball	☐ Sleeve	☐ Rifle	☐ FDB
Speed Control	☑ Voltage	☐ Temperature	☑ PWM	
	☐ ±5% Speed tolerance		☑ ±10% Speed tolerance	
Frame Type	☐ 4 Screw	☑ 8 Screw		
Signal output	☑ Alarm Signal	☑ Tacho Signal		
Protection	☑ Lock	☑ Reverse	☐ Over Voltage	☐ Over heat
ESD ①	☐ Class Ⅰ	☐ Class Ⅱ	☑ Class Ⅲ	
Insulation ②	☑ Class A	☐ Class B	☐ Class C	☐ Class F
Safety	☑ UL	☑ TUV	☑ CE	☐ VDE
Motor type	☑ Uni-phase	☐ 2 phase	☐ 3 phase	

AIR FLOW/STATIC-PRESSURE

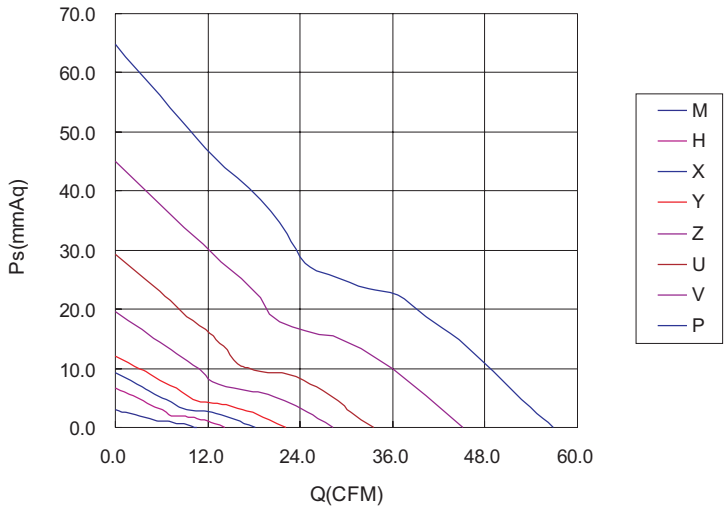

OUTLINE(mm)

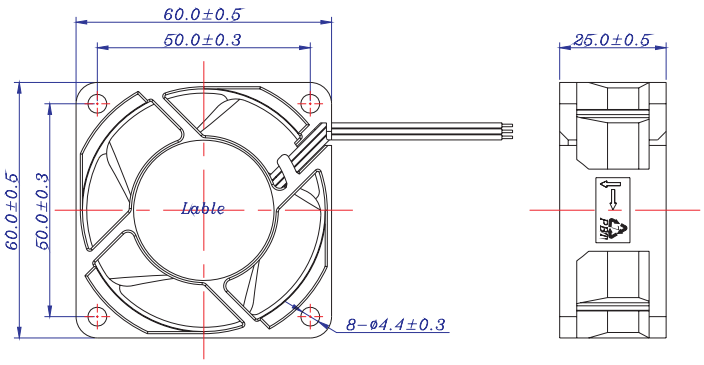

Note:

①-Reference standard: IEC 61000-4-2

②-Reference standard: UL 1446

Item No.	Operating Voltage	Maximum Air Flow		Maximum Air Pressure		Speed	Rated Current	Input Power	Noise	Weight
	(V)	(CMM)	(CFM)	(mmAq)	(inchAq)	(rpm)	(A)	(W)	dB(A)	(g)
MG(1)6012MB-(2)25	12	0.299	10.57	2.95	0.116	4,000	0.13	1.56	28.3	88
MG(1)6012HB-(2)25	12	0.402	14.19	6.69	0.263	5,200	0.17	2.04	32.8	88
MG(1)6012XB-(2)25	12	0.513	18.10	9.25	0.364	6,500	0.20	2.40	37.5	88
MG(1)6012YB-(2)25	12	0.627	22.15	12.16	0.479	8,000	0.26	3.12	43.6	88
MG(1)6012ZB-(2)25	12	0.799	28.21	19.60	0.772	10,000	0.31	3.72	48.4	88
MG(1)6012UB-(2)25	12	0.950	33.53	29.20	1.150	12,000	0.38	4.56	52.7	88
MG(1)6012VB-(2)25	12	1.280	45.20	45.00	1.772	16,000	0.90	10.80	60.1	88
MG(1)6012PB-(2)25	12	1.609	56.81	64.90	2.555	20,000	1.56	18.72	65.3	88

Remarks:

(1)-Electric Characteristics:

A: Standard 2-Pin; **T**: Frequency Generation 3-Pin or more.

(2)-Function:

A: None Automatic Restart;
O: Automatic Restart & Locked Current Protection;
R: Rotate Detection Automatic Restart & Locked Current Protection;
S: Thermo-Control Speed, Automatic Restart & Locked Current Protection;
W: Pulse Width Modulation & Automatic Restart & Locked Current Protection (PWM).

The spec is for reference only, it's subject to change without any prior notice

60x60x38mm series B

Bearing Type	☑ 2 Ball	☐ Sleeve	☐ Rifle	☐ FDB
Speed Control	☑ Voltage	☐ Temperature	☑ PWM	
	☐ ±5% Speed tolerance		☑ ±10% Speed tolerance	
Frame Type	☐ 4 Screw	☑ 8 Screw		
Signal output	☑ Alarm Signal	☑ Tacho Signal		
Protection	☑ Lock	☑ Reverse	☐ Over Voltage	☐ Over heat
ESD ①	☐ Class Ⅰ	☐ Class Ⅱ	☑ Class Ⅲ	
Insulation ②	☑ Class A	☐ Class B	☐ Class C	☐ Class F
Safety	☑ UL	☑ TUV	☑ CE	☐ VDE
Motor type	☑ Uni-phase	☐ 2 phase	☐ 3 phase	

AIR FLOW/STATIC-PRESSURE

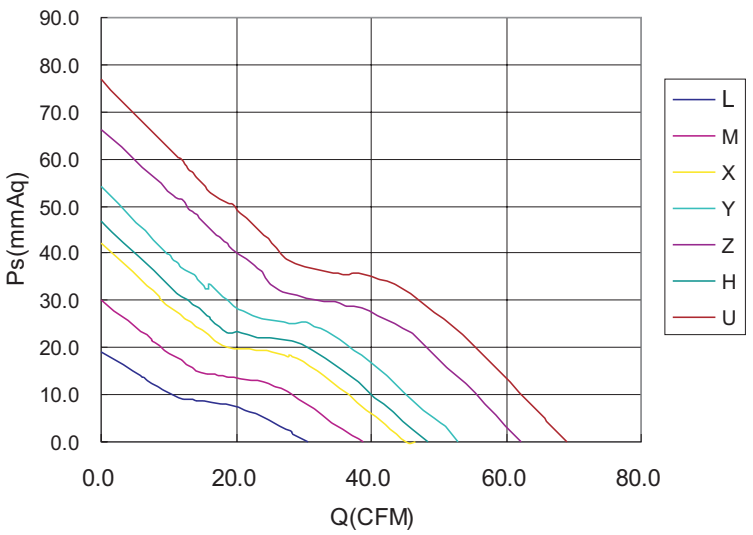

OUTLINE(mm)

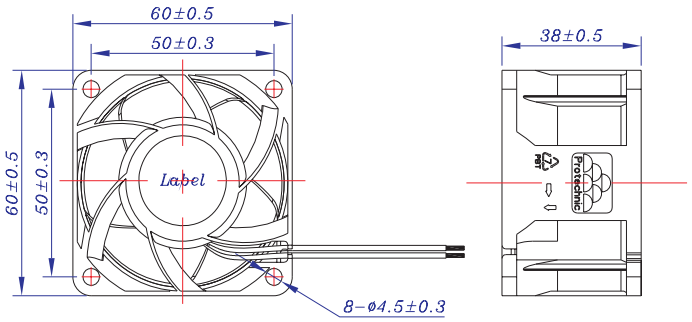

Note:

①-Reference standard: IEC 61000-4-2

②-Reference standard: UL 1446

Item No.	Operating Voltage	Maximum Air Flow		Maximum Air Pressure		Speed	Rated Current	Input Power	Noise	Weight
	(V)	(CMM)	(CFM)	(mmAq)	(inchAq)	(rpm)	(A)	(W)	dB(A)	(g)
MG(1)6012LB-(2)38	12	0.866	30.58	19.00	0.748	8,000	0.35	4.20	44.0	118
MG(1)6012MB-(2)38	12	1.101	38.87	30.10	1.185	10,000	0.50	6.00	50.3	118
MG(1)6012HB-(2)38	12	1.290	45.54	37.70	1.484	12,000	0.75	9.00	52.4	118
MG(1)6012XB-(2)38	12	1.397	49.34	46.80	1.843	13,000	0.95	11.40	54.5	118
MG(1)6012YB-(2)38	12	1.505	53.13	50.00	1.969	14,000	1.20	14.40	55.3	118
MG(1)6012ZB-(2)38	12	1.728	61.00	66.20	2.606	16,000	1.50	18.00	58.8	118
MG(1)6012UB-(2)38	12	1.943	68.62	77.50	3.051	18,000	1.80	21.60	62.0	118
MG(1)6024LB-(2)38	24	0.866	30.58	19.00	0.748	8,000	0.18	4.32	44.0	118
MG(1)6024MB-(2)38	24	1.101	38.87	30.10	1.185	10,000	0.25	6.00	50.3	118
MG(1)6024HB-(2)38	24	1.290	45.54	37.70	1.484	12,000	0.38	9.12	52.4	118
MG(1)6024XB-(2)38	24	1.397	49.34	46.80	1.843	13,000	0.50	12.00	54.5	118
MG(1)6024YB-(2)38	24	1.505	53.13	50.00	1.969	14,000	0.60	14.40	55.3	118
MG(1)6024ZB-(2)38	24	1.728	61.00	66.20	2.606	16,000	0.75	18.00	58.8	118
MG(1)6024UB-(2)38	24	1.943	68.62	77.50	3.051	18,000	1.00	24.00	62.0	118
MG(1)6048LB-(2)38	48	0.866	30.58	19.00	0.748	8,000	0.13	6.24	44.0	118
MG(1)6048MB-(2)38	48	1.101	38.87	30.10	1.185	10,000	0.16	7.68	50.3	118
MG(1)6048HB-(2)38	48	1.290	45.54	37.70	1.484	12,000	0.22	10.56	52.4	118
MG(1)6048XB-(2)38	48	1.397	49.34	46.80	1.843	13,000	0.27	12.96	54.5	118
MG(1)6048YB-(2)38	48	1.505	53.13	50.00	1.969	14,000	0.36	17.28	55.3	118
MG(1)6048ZB-(2)38	48	1.728	61.00	66.20	2.606	16,000	0.40	19.20	58.8	118
MG(1)6048UB-(2)38	48	1.943	68.62	77.50	3.051	18,000	0.50	24.00	62.0	118

Remarks:

(1)-Electric Characteristics:

A: Standard 2-Pin; **T**: Frequency Generation 3-Pin or more.

(2)-Function:

A: None Automatic Restart;
O: Automatic Restart & Locked Current Protection;
R: Rotate Detection Automatic Restart & Locked Current Protection;
S: Thermo-Control Speed, Automatic Restart & Locked Current Protection;
W: Pulse Width Modulation & Automatic Restart & Locked Current Protection (PWM).

The spec is for reference only, it's subject to change without any prior notice

60x60x38mm series C

Bearing Type	☑ 2 Ball	☐ Sleeve	☐ Rifle	☐ FDB
Speed Control	☑ Voltage	☐ Temperature	☑ PWM	
	☑ ±5% Speed tolerance		☑ ±10% Speed tolerance	
Frame Type	☐ 4 Screw	☑ 8 Screw		
Signal output	☑ Alarm Signal	☑ Tacho Signal		
Protection	☑ Lock	☑ Reverse	☐ Over Voltage	☐ Over heat
ESD ①	☐ Class Ⅰ	☑ Class Ⅱ	☐ Class Ⅲ	
Insulation ②	☑ Class A	☐ Class B	☐ Class C	☐ Class F
Safety	☑ UL	☑ TUV	☑ CE	☐ VDE
Motor type	☑ Uni-phase	☐ 2 phase	☐ 3 phase	

AIR FLOW/STATIC-PRESSURE

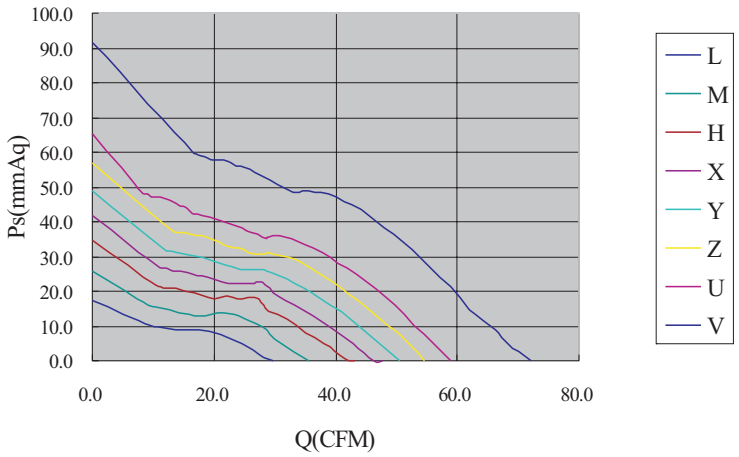

OUTLINE(mm)

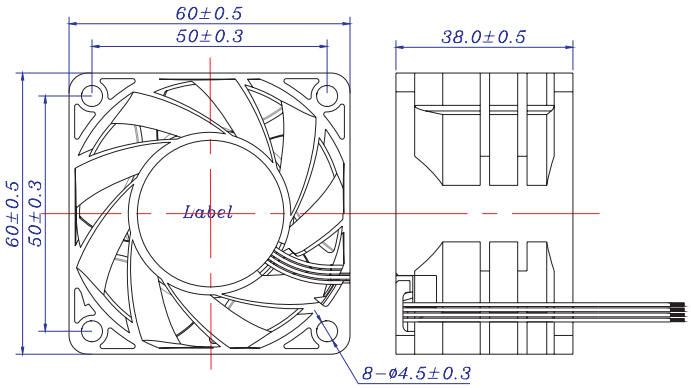

Note:

①-Reference standard: IEC 61000-4-2

②-Reference standard: UL 1446

Item No.	Operating Voltage	Maximum Air Flow		Maximum Air Pressure		Speed	Rated Current	Input Power	Noise	Weight
	(V)	(CMM)	(CFM)	(mmAq)	(inchAq)	(rpm)	(A)	(W)	dB(A)	(g)
MG(1)6012LB-(2)38	12	0.838	29.60	17.50	0.688	7,000	0.35	4.20	47.0	120
MG(1)6012MB-(2)38	12	1.009	35.62	26.00	1.023	8,500	0.50	6.00	52.3	120
MG(1)6012HB-(2)38	12	1.224	43.22	34.80	1.370	10,000	0.75	9.00	56.5	120
MG(1)6012XB-(2)38	12	1.353	47.77	41.90	1.649	11,000	0.95	11.40	59.9	120
MG(1)6012YB-(2)38	12	1.435	50.66	49.00	1.929	12,000	1.20	14.40	60.6	120
MG(1)6012ZB-(2)38	12	1.548	54.65	57.00	2.244	13,000	1.50	18.00	62.2	120
MG(1)6012UB-(2)38	12	1.671	59.00	65.20	2.566	14,000	1.80	21.60	65.5	120
MG(1)6012VB-(2)38	12	2.042	72.10	91.70	3.610	16,800	3.30	39.60	68.5	120

Remarks:

(1)-Electric Characteristics:

A: Standard 2-Pin; **T**: Frequency Generation 3-Pin or more.

(2)-Function:

A: None Automatic Restart;
O: Automatic Restart & Locked Current Protection;
R: Rotate Detection Automatic Restart & Locked Current Protection;
S: Thermo-Control Speed, Automatic Restart & Locked Current Protection;
W: Pulse Width Modulation & Automatic Restart & Locked Current Protection (PWM).

The spec is for reference only, it's subject to change without any prior notice

60x60x76mm series

Bearing Type	☑ 2 Ball	☐ Sleeve	☐ Rifle	☐ FDB
Speed Control	☑ Voltage	☐ Temperature	☑ PWM	
	☐ ±5% Speed tolerance		☑ ±10% Speed tolerance	
Frame Type	☐ 4 Screw	☑ 8 Screw		
Signal output	☑ Alarm Signal	☑ Tacho Signal		
Protection	☑ Lock	☑ Reverse	☐ Over Voltage	☐ Over heat
ESD ①	☐ Class Ⅰ	☐ Class Ⅱ	☑ Class Ⅲ	
Insulation ②	☑ Class A	☐ Class B	☐ Class C	☐ Class F
Safety	☑ UL	☑ TUV	☑ CE	☐ VDE
Motor type	☑ Uni-phase	☐ 2 phase	☐ 3 phase	

AIR FLOW/STATIC-PRESSURE

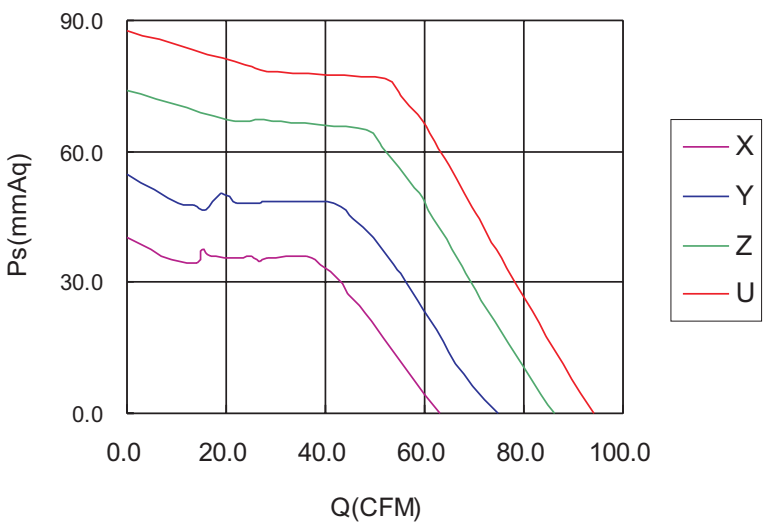

OUTLINE(mm)

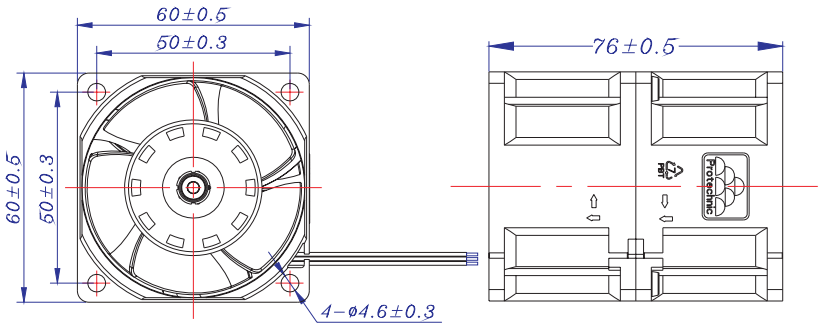

Note:

①-Reference standard: IEC 61000-4-2

②-Reference standard: UL 1446

Item No.	Operating Voltage	Maximum Air Flow		Maximum Air Pressure		Speed	Rated Current	Input Power	Noise	Weight
	(V)	(CMM)	(CFM)	(mmAq)	(inchAq)	(rpm)	(A)	(W)	dB(A)	(g)
MG(1)6012XB-(2)76	12	1.791	63.21	40.40	1.591	9,000/10,000	2.60	31.20	67.9	247
MG(1)6012YB-(2)76	12	2.120	74.82	54.60	2.150	10,000/11,500	3.30	39.60	72.8	247
MG(1)6012ZB-(2)76	12	2.443	86.25	74.10	2.917	12,000/12,500	4.20	50.40	74.6	247
MG(1)6012UB-(2)76	12	2.667	94.15	87.50	3.445	13,000/13,500	5.00	60.00	76.8	247

Remarks:

(1)-Electric Characteristics:

A: Standard 2-Pin; **T**: Frequency Generation 3-Pin or more.

(2)-Function:

A: None Automatic Restart;
O: Automatic Restart & Locked Current Protection;
R: Rotate Detection Automatic Restart & Locked Current Protection;
S: Thermo-Control Speed, Automatic Restart & Locked Current Protection;
W: Pulse Width Modulation & Automatic Restart & Locked Current Protection (PWM).

The spec is for reference only, it's subject to change without any prior notice

70x70x15mm series

Bearing Type	☑ 2 Ball	☐ Sleeve	☑ Rifle	☑ FDB
Speed Control	☑ Voltage	☑ Temperature	☑ PWM	
	☐ ±5% Speed tolerance		☑ ±10% Speed tolerance	
Frame Type	☑ 4 Screw	☑ 8 Screw		
Signal output	☑ Alarm Signal	☑ Tacho Signal		
Protection	☑ Lock	☑ Reverse	☐ Over Voltage	☐ Over heat
ESD ①	☐ Class Ⅰ	☐ Class Ⅱ	☑ Class Ⅲ	
Insulation ②	☑ Class A	☐ Class B	☐ Class C	☐ Class F
Safety	☑ UL	☑ TUV	☑ CE	☐ VDE
Motor type	☑ Uni-phase	☑ 2 phase	☐ 3 phase	

AIR FLOW/STATIC-PRESSURE

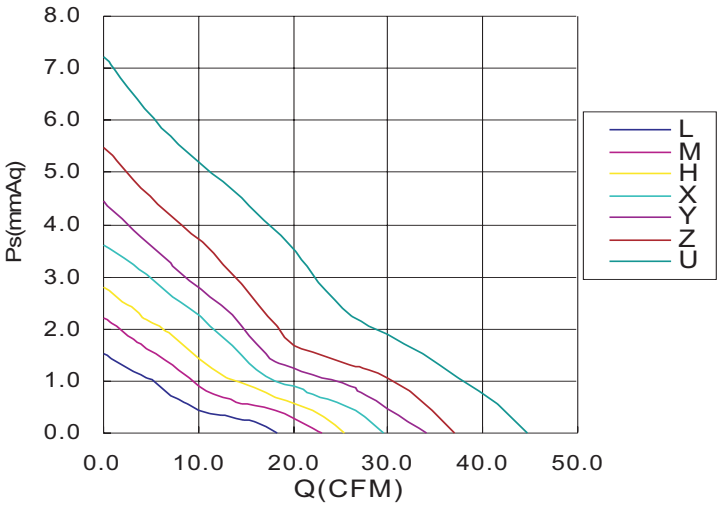

OUTLINE(mm)

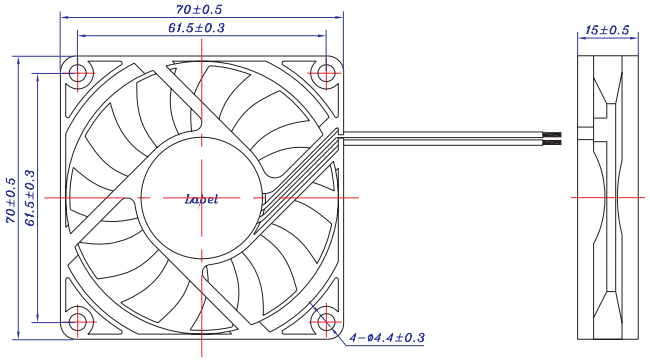

Note:

①-Reference standard: IEC 61000-4-2

②-Reference standard: UL 1446

Item No.	Operating Voltage	Maximum Air Flow		Maximum Air Pressure		Speed	Rated Current	Input Power	Noise	Weight
	(V)	(CMM)	(CFM)	(mmAq)	(inchAq)	(rpm)	(A)	(W)	dB(A)	(g)
MG(1)7012LR-(2)15	12	0.518	18.27	1.52	0.060	2,200	0.10	1.20	25.5	50
MG(1)7012MR-(2)15	12	0.650	22.94	2.22	0.087	2,600	0.13	1.56	27.6	50
MG(1)7012HR-(2)15	12	0.736	25.98	2.91	0.115	3,000	0.17	2.04	30.3	50
MG(1)7012XR-(2)15	12	0.835	29.46	3.61	0.142	3,400	0.22	2.64	33.1	50
MG(1)7012YR-(2)15	12	0.964	34.02	4.45	0.175	3,800	0.28	3.36	36.0	50
MG(1)7012ZR-(2)15	12	1.049	37.02	5.48	0.216	4,200	0.41	4.92	38.6	50
MG(1)7012UR-(2)15	12	1.267	44.71	7.22	0.284	5,000	0.58	6.96	43.2	50
MG(1)7012LB-(2)15	12	0.518	18.27	1.52	0.060	2,200	0.10	1.20	26.1	50
MG(1)7012MB-(2)15	12	0.650	22.94	2.22	0.087	2,600	0.13	1.56	29.7	50
MG(1)7012HB-(2)15	12	0.736	25.98	2.91	0.115	3,000	0.17	2.04	30.4	50
MG(1)7012XB-(2)15	12	0.835	29.46	3.61	0.142	3,400	0.22	2.04	34.7	50
MG(1)7012YB-(2)15	12	0.964	34.02	4.45	0.175	3,800	0.28	2.04	36.1	50
MG(1)7012ZB-(2)15	12	1.049	37.02	5.48	0.216	4,200	0.41	2.04	38.7	50
MG(1)7012UB-(2)15	12	1.267	44.71	7.22	0.284	5,000	0.58	2.04	43.9	50
MG(1)7024LR-(2)15	24	0.518	18.27	1.52	0.060	2,200	0.10	2.40	25.5	50
MG(1)7024MR-(2)15	24	0.650	22.94	2.22	0.087	2,600	0.13	3.12	27.6	50
MG(1)7024HR-(2)15	24	0.736	25.98	2.91	0.115	3,000	0.16	3.84	30.3	50
MG(1)7024XR-(2)15	24	0.835	29.46	3.61	0.142	3,400	0.18	4.32	33.1	50
MG(1)7024YR-(2)15	24	0.964	34.02	4.45	0.175	3,800	0.21	5.04	36.0	50
MG(1)7024ZR-(2)15	24	1.049	37.02	5.48	0.216	4,200	0.25	6.00	38.6	50
MG(1)7024LB-(2)15	24	0.518	18.27	1.52	0.060	2,200	0.10	2.40	26.1	50
MG(1)7024MB-(2)15	24	0.650	22.94	2.22	0.087	2,600	0.13	3.12	29.7	50
MG(1)7024HB-(2)15	24	0.736	25.98	2.91	0.115	3,000	0.16	3.84	30.4	50
MG(1)7024XB-(2)15	24	0.835	29.46	3.61	0.142	3,400	0.18	4.32	34.7	50
MG(1)7024YB-(2)15	24	0.964	34.02	4.45	0.175	3,800	0.21	5.04	36.1	50
MG(1)7024ZB-(2)15	24	1.049	37.02	5.48	0.216	4,200	0.25	6.00	38.7	50

Remarks:

(1)-Electric Characteristics:

A: Standard 2-Pin; **T**: Frequency Generation 3-Pin or more.

(2)-Function:

A: None Automatic Restart;
O: Automatic Restart & Locked Current Protection;
R: Rotate Detection Automatic Restart & Locked Current Protection;
S: Thermo-Control Speed, Automatic Restart & Locked Current Protection;
W: Pulse Width Modulation & Automatic Restart & Locked Current Protection (PWM).

The spec is for reference only, it's subject to change without any prior notice

70x70x20mm series

Bearing Type	☑ 2 Ball	☐ Sleeve	☑ Rifle	☑ FDB
Speed Control	☑ Voltage	☑ Temperature	☑ PWM	
	☐ ±5% Speed tolerance		☑ ±10% Speed tolerance	
Frame Type	☑ 4 Screw	☐ 8 Screw		
Signal output	☑ Alarm Signal	☑ Tacho Signal		
Protection	☑ Lock	☑ Reverse	☐ Over Voltage	☐ Over heat
ESD ①	☐ Class Ⅰ	☐ Class Ⅱ	☑ Class Ⅲ	
Insulation ②	☑ Class A	☐ Class B	☐ Class C	☐ Class F
Safety	☑ UL	☑ TUV	☑ CE	☐ VDE
Motor type	☑ Uni-phase	☑ 2 phase	☐ 3 phase	

AIR FLOW/STATIC-PRESSURE

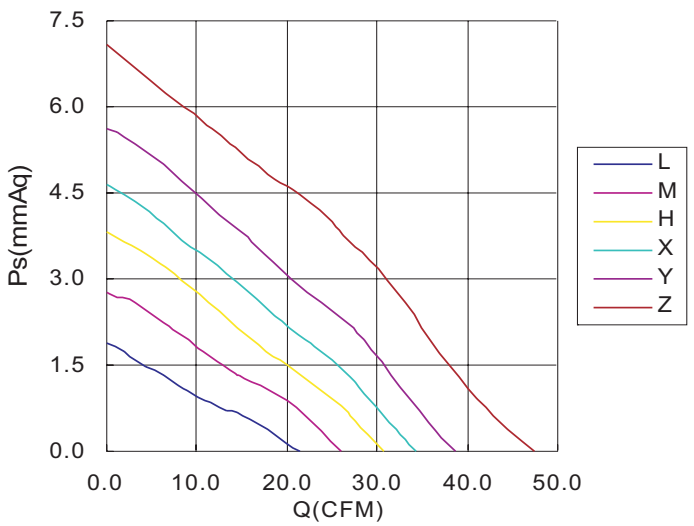

OUTLINE(mm)

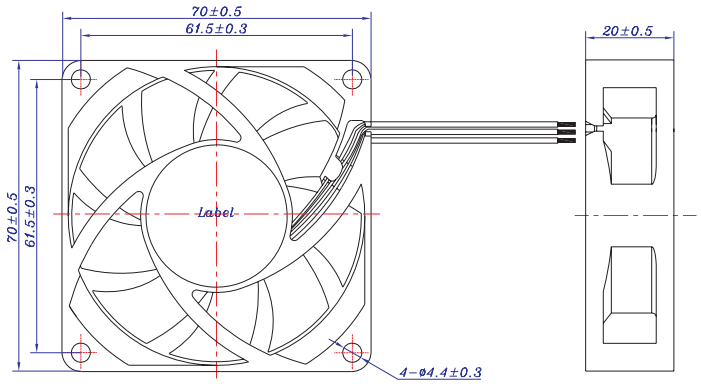

Note:

①-Reference standard: IEC 61000-4-2

②-Reference standard: UL 1446

Item No.	Operating Voltage	Maximum Air Flow		Maximum Air Pressure		Speed	Rated Current	Input Power	Noise	Weight
	(V)	(CMM)	(CFM)	(mmAq)	(inchAq)	(rpm)	(A)	(W)	dB(A)	(g)
MG(1)7012LF-(2)20	12	0.604	21.33	1.87	0.074	2,500	0.14	1.68	27.4	68
MG(1)7012MF-(2)20	12	0.736	25.97	2.76	0.109	3,000	0.19	2.28	30.5	68
MG(1)7012HF-(2)20	12	0.870	30.70	3.81	0.150	3,500	0.27	3.24	34.0	68
MG(1)7012XF-(2)20	12	0.971	34.28	4.51	0.178	3,900	0.36	4.32	37.3	68
MG(1)7012YF-(2)20	12	1.096	38.69	5.63	0.222	4,300	0.43	5.16	39.7	68
MG(1)7012ZF-(2)20	12	1.346	47.51	7.09	0.279	5,400	0.63	7.56	46.4	68
MG(1)7012LR-(2)20	12	0.604	21.33	1.87	0.074	2,500	0.14	1.68	27.5	67
MG(1)7012MR-(2)20	12	0.736	25.97	2.76	0.109	3,000	0.19	2.28	30.7	67
MG(1)7012HR-(2)20	12	0.870	30.70	3.81	0.150	3,500	0.27	3.24	35.1	67
MG(1)7012XR-(2)20	12	0.971	34.28	4.51	0.178	3,900	0.36	4.32	37.9	67
MG(1)7012YR-(2)20	12	1.096	38.69	5.63	0.222	4,300	0.43	5.16	40.1	67
MG(1)7012ZR-(2)20	12	1.346	47.51	7.09	0.279	5,400	0.63	7.56	46.7	67
MG(1)7012LB-(2)20	12	0.604	21.33	1.87	0.074	2,500	0.14	1.68	27.6	66
MG(1)7012MB-(2)20	12	0.736	25.97	2.76	0.109	3,000	0.19	2.28	31.5	66
MG(1)7012HB-(2)20	12	0.870	30.70	3.81	0.150	3,500	0.27	3.24	35.3	66
MG(1)7012XB-(2)20	12	0.971	34.28	4.51	0.178	3,900	0.36	4.32	38.0	66
MG(1)7012YB-(2)20	12	1.096	38.69	5.63	0.222	4,300	0.43	5.16	40.8	66
MG(1)7012ZB-(2)20	12	1.346	47.51	7.09	0.279	5,400	0.63	7.56	47.0	66
MG(1)7024LF-(2)20	24	0.604	21.33	1.87	0.074	2,500	0.08	1.92	27.4	68
MG(1)7024MF-(2)20	24	0.736	25.97	2.76	0.109	3,000	0.11	2.64	30.5	68
MG(1)7024HF-(2)20	24	0.870	30.70	3.81	0.150	3,500	0.16	3.84	34.0	68
MG(1)7024XF-(2)20	24	0.971	34.28	4.51	0.178	3,900	0.20	4.80	37.3	68
MG(1)7024YF-(2)20	24	1.096	38.69	5.63	0.222	4,300	0.24	5.76	39.7	68
MG(1)7024LR-(2)20	24	0.604	21.33	1.87	0.074	2,500	0.08	1.92	27.5	67
MG(1)7024MR-(2)20	24	0.736	25.97	2.76	0.109	3,000	0.11	2.64	30.7	67
MG(1)7024HR-(2)20	24	0.870	30.70	3.81	0.150	3,500	0.16	3.84	35.1	67
MG(1)7024XR-(2)20	24	0.971	34.28	4.51	0.178	3,900	0.20	4.80	37.9	67
MG(1)7024YR-(2)20	24	1.096	38.69	5.63	0.222	4,300	0.24	5.76	40.1	67
MG(1)7024LB-(2)20	24	0.604	21.33	1.87	0.074	2,500	0.08	1.92	27.6	66
MG(1)7024MB-(2)20	24	0.736	25.97	2.76	0.109	3,000	0.11	2.64	31.5	66
MG(1)7024HB-(2)20	24	0.870	30.70	3.81	0.150	3,500	0.16	3.84	35.3	66
MG(1)7024XB-(2)20	24	0.971	34.28	4.51	0.178	3,900	0.20	4.80	38.0	66
MG(1)7024YB-(2)20	24	1.096	38.69	5.63	0.222	4,300	0.24	5.76	40.8	66

Remarks:

(1)-Electric Characteristics:

A: Standard 2-Pin; **T**: Frequency Generation 3-Pin or more.

(2)-Function:

A: None Automatic Restart;
O: Automatic Restart & Locked Current Protection;
R: Rotate Detection Automatic Restart & Locked Current Protection;
S: Thermo-Control Speed, Automatic Restart & Locked Current Protection;
W: Pulse Width Modulation & Automatic Restart & Locked Current Protection (PWM).

The spec is for reference only, it's subject to change without any prior notice

70x70x25mm series C

Bearing Type	☑ 2 Ball	☐ Sleeve	☑ Rifle	☐ FDB
Speed Control	☑ Voltage	☑ Temperature	☑ PWM	
	☐ ±5% Speed tolerance		☑ ±10% Speed tolerance	
Frame Type	☑ 4 Screw	☑ 8 Screw		
Signal output	☑ Alarm Signal	☑ Tacho Signal		
Protection	☑ Lock	☑ Reverse	☐ Over Voltage	☐ Over heat
ESD ①	☐ Class Ⅰ	☐ Class Ⅱ	☑ Class Ⅲ	
Insulation ②	☑ Class A	☐ Class B	☐ Class C	☐ Class F
Safety	☑ UL	☑ TUV	☑ CE	☐ VDE
Motor type	☑ Uni-phase	☑ 2 phase	☐ 3 phase	

AIR FLOW/STATIC-PRESSURE

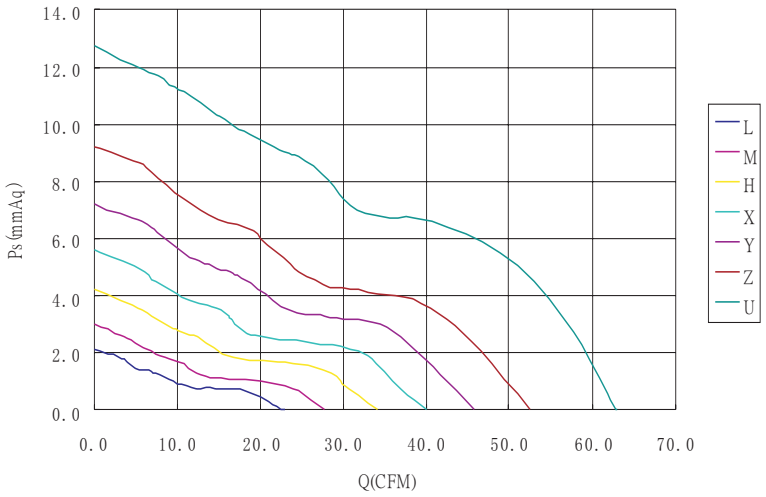

OUTLINE(mm)

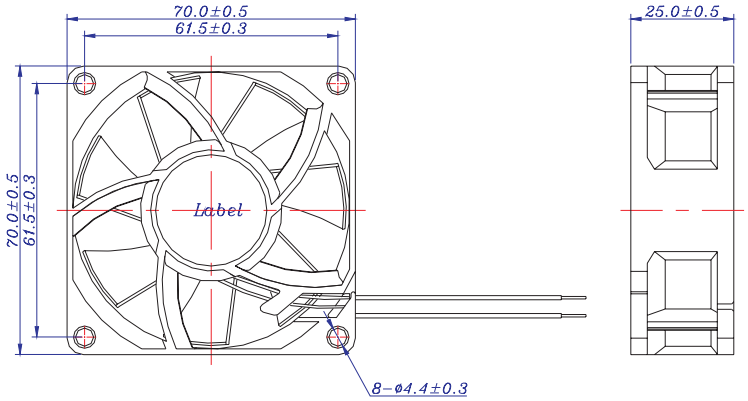

Note:

①-Reference standard: IEC 61000-4-2

②-Reference standard: UL 1446

Item No.	Operating Voltage	Maximum Air Flow		Maximum Air Pressure		Speed	Rated Current	Input Power	Noise	Weight
	(V)	(CMM)	(CFM)	(mmAq)	(inchAq)	(rpm)	(A)	(W)	dB(A)	(g)
MG(1)7012LR-(2)25	12	0.651	22.99	2.16	0.085	2,500	0.12	1.44	24.8	70
MG(1)7012MR-(2)25	12	0.786	27.73	3.01	0.119	3,000	0.17	2.04	31.0	70
MG(1)7012HR-(2)25	12	0.965	34.08	4.24	0.167	3,600	0.22	2.64	35.4	70
MG(1)7012XR-(2)25	12	1.131	39.92	5.63	0.222	4,200	0.30	3.60	39.2	70
MG(1)7012YR-(2)25	12	1.294	45.67	7.21	0.284	4,800	0.39	4.68	43.3	70
MG(1)7012ZR-(2)25	12	1.485	52.42	9.20	0.362	5,400	0.43	5.16	46.6	70
MG(1)7012UR-(2)25	12	1.786	63.03	12.73	0.501	6,500	0.76	9.12	51.9	70
MG(1)7012LB-(2)25	12	0.651	22.99	2.16	0.085	2,500	0.12	1.44	25.0	72
MG(1)7012MB-(2)25	12	0.786	27.73	3.01	0.119	3,000	0.17	2.04	31.2	72
MG(1)7012HB-(2)25	12	0.965	34.08	4.24	0.167	3,600	0.22	2.64	35.6	72
MG(1)7012XB-(2)25	12	1.131	39.92	5.63	0.222	4,200	0.30	3.60	39.4	72
MG(1)7012YB-(2)25	12	1.294	45.67	7.21	0.284	4,800	0.39	4.68	43.5	72
MG(1)7012ZB-(2)25	12	1.485	52.42	9.20	0.362	5,400	0.43	5.16	46.8	72
MG(1)7012UB-(2)25	12	1.786	63.03	12.73	0.501	6,500	0.76	9.12	52.1	72
MG(1)7024LR-(2)25	24	0.651	22.99	2.16	0.085	2,500	0.09	2.16	24.8	70
MG(1)7024MR-(2)25	24	0.786	27.73	3.01	0.119	3,000	0.11	2.64	31.0	70
MG(1)7024HR-(2)25	24	0.965	34.08	4.24	0.167	3,600	0.13	3.12	35.4	70
MG(1)7024XR-(2)25	24	1.131	39.92	5.63	0.222	4,200	0.16	3.84	39.2	70
MG(1)7024YR-(2)25	24	1.294	45.67	7.21	0.284	4,800	0.20	4.80	43.3	70
MG(1)7024ZR-(2)25	24	1.485	52.42	9.20	0.362	5,400	0.25	6.00	46.6	70
MG(1)7024UR-(2)25	24	1.786	63.03	12.73	0.501	6,500	0.45	10.80	51.9	70
MG(1)7024LB-(2)25	24	0.651	22.99	2.16	0.085	2,500	0.09	2.16	25.0	72
MG(1)7024MB-(2)25	24	0.786	27.73	3.01	0.119	3,000	0.11	2.64	31.2	72
MG(1)7024HB-(2)25	24	0.965	34.08	4.24	0.167	3,600	0.13	3.12	35.6	72
MG(1)7024XB-(2)25	24	1.131	39.92	5.63	0.222	4,200	0.16	3.84	39.4	72
MG(1)7024YB-(2)25	24	1.294	45.67	7.21	0.284	4,800	0.20	4.80	43.5	72
MG(1)7024ZB-(2)25	24	1.485	52.42	9.20	0.362	5,400	0.25	6.00	46.8	72
MG(1)7024UB-(2)25	24	1.786	63.03	12.73	0.501	6,500	0.45	10.80	52.1	72

Remarks:

(1)-Electric Characteristics:

A: Standard 2-Pin; **T**: Frequency Generation 3-Pin or more.

(2)-Function:

A: None Automatic Restart;
O: Automatic Restart & Locked Current Protection;
R: Rotate Detection Automatic Restart & Locked Current Protection;
S: Thermo-Control Speed, Automatic Restart & Locked Current Protection;
W: Pulse Width Modulation & Automatic Restart & Locked Current Protection (PWM).

The spec is for reference only, it's subject to change without any prior notice

80x80x15mm series B

Bearing Type	☐ 2 Ball	☐ Sleeve	☐ Rifle	☑ FDB
Speed Control	☑ Voltage	☑ Temperature	☑ PWM	
	☐ ±5% Speed tolerance		☑ ±10% Speed tolerance	
Frame Type	☑ 4 Screw	☐ 8 Screw		
Signal output	☑ Alarm Signal	☑ Tacho Signal		
Protection	☑ Lock	☑ Reverse	☐ Over Voltage	☐ Over heat
ESD ①	☐ Class Ⅰ	☐ Class Ⅱ	☑ Class Ⅲ	
Insulation ②	☑ Class A	☐ Class B	☐ Class C	☐ Class F
Safety	☑ UL	☑ TUV	☑ CE	☐ VDE
Motor type	☑ Uni-phase	☑ 2 phase	☐ 3 phase	

AIR FLOW/STATIC-PRESSURE

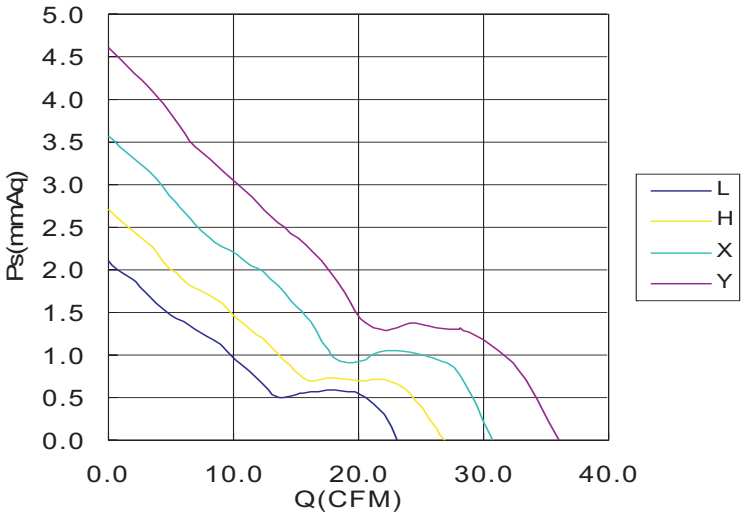

OUTLINE(mm)

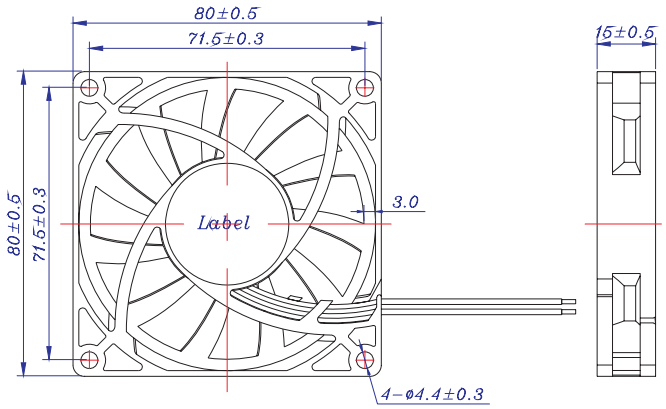

Note:

①-Reference standard: IEC 61000-4-2

②-Reference standard: UL 1446

Item No.	Operating Voltage	Maximum Air Flow		Maximum Air Pressure		Speed	Rated Current	Input Power	Noise	Weight
	(V)	(CMM)	(CFM)	(mmAq)	(inchAq)	(rpm)	(A)	(W)	dB(A)	(g)
MG(1)8012LF-(2)15	12	0.652	23.00	2.10	0.083	2,600	0.10	1.20	29.6	55
MG(1)8012HF-(2)15	12	0.762	26.90	2.70	0.106	3,000	0.18	2.16	32.7	55
MG(1)8012XF-(2)15	12	0.872	30.78	3.57	0.141	3,500	0.23	2.76	36.2	55
MG(1)8012YF-(2)15	12	1.019	35.96	4.61	0.181	4,000	0.28	3.36	39.3	55

Remarks:

(1)-Electric Characteristics:

A: Standard 2-Pin; **T**: Frequency Generation 3-Pin or more.

(2)-Function:

A: None Automatic Restart;
O: Automatic Restart & Locked Current Protection;
R: Rotate Detection Automatic Restart & Locked Current Protection;
S: Thermo-Control Speed, Automatic Restart & Locked Current Protection;
W: Pulse Width Modulation & Automatic Restart & Locked Current Protection (PWM).

The spec is for reference only, it's subject to change without any prior notice

80x80x15mm series C

Bearing Type	☑ 2 Ball	☐ Sleeve	☑ Rifle	☑ FDB
Speed Control	☑ Voltage	☑ Temperature	☑ PWM	
	☐ ±5% Speed tolerance		☑ ±10% Speed tolerance	
Frame Type	☑ 4 Screw	☐ 8 Screw		
Signal output	☑ Alarm Signal	☑ Tacho Signal		
Protection	☑ Lock	☑ Reverse	☐ Over Voltage	☐ Over heat
ESD ①	☐ Class Ⅰ	☐ Class Ⅱ	☑ Class Ⅲ	
Insulation ②	☑ Class A	☐ Class B	☐ Class C	☐ Class F
Safety	☑ UL	☑ TUV	☑ CE	☐ VDE
Motor type	☑ Uni-phase	☑ 2 phase	☐ 3 phase	

AIR FLOW/STATIC-PRESSURE

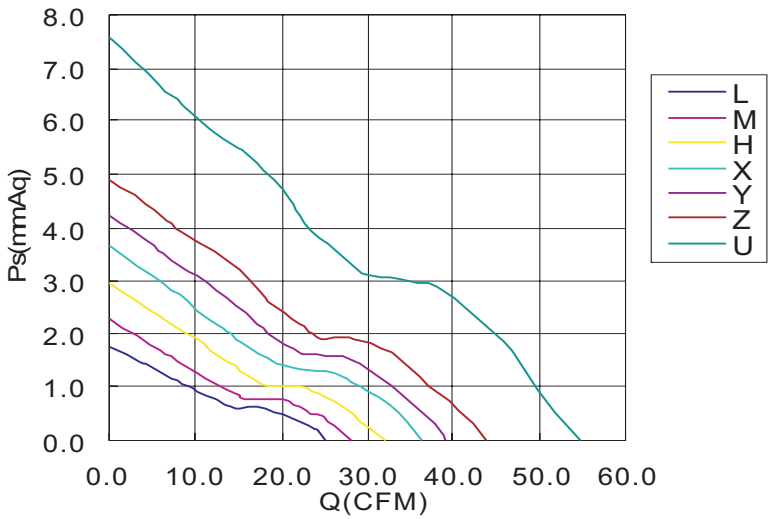

OUTLINE(mm)

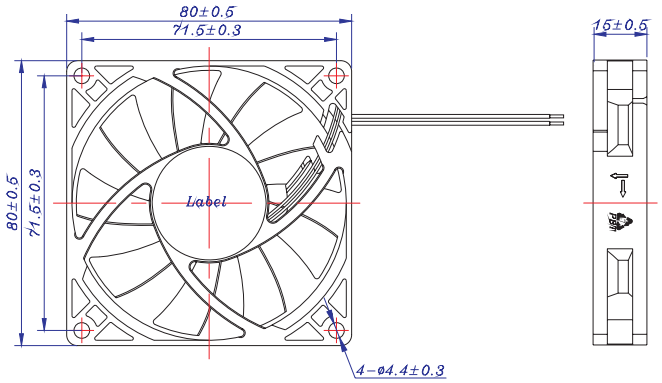

Note:

①-Reference standard: IEC 61000-4-2

②-Reference standard: UL 1446

Item No.	Operating Voltage	Maximum Air Flow		Maximum Air Pressure		Speed	Rated Current	Input Power	Noise	Weight
	(V)	(CMM)	(CFM)	(mmAq)	(inchAq)	(rpm)	(A)	(W)	dB(A)	(g)
MG(1)8012LB-(2)15	12	0.710	25.07	1.77	0.070	2,400	0.10	1.20	26.1	55
MG(1)8012MB-(2)15	12	0.802	28.31	2.37	0.093	2,700	0.13	1.56	29.6	55
MG(1)8012HB-(2)15	12	0.914	32.27	2.93	0.115	3,000	0.18	2.16	32.8	55
MG(1)8012XB-(2)15	12	1.031	36.40	3.67	0.145	3,400	0.23	2.76	35.8	55
MG(1)8012YB-(2)15	12	1.111	39.22	4.24	0.167	3,700	0.28	3.36	38.1	55
MG(1)8012ZB-(2)15	12	1.236	43.61	4.90	0.193	4,000	0.35	4.20	39.9	55
MG(1)8012UB-(2)15	12	1.548	54.65	7.57	0.298	5,000	0.50	6.00	46.0	55
MG(1)8012LR-(2)15	12	0.710	25.07	1.77	0.070	2,400	0.10	1.20	25.9	55
MG(1)8012MR-(2)15	12	0.802	28.31	2.37	0.093	2,700	0.13	1.56	29.4	55
MG(1)8012HR-(2)15	12	0.914	32.27	2.93	0.115	3,000	0.18	2.16	32.6	55
MG(1)8012XR-(2)15	12	1.031	36.40	3.67	0.145	3,400	0.23	2.76	35.6	55
MG(1)8012YR-(2)15	12	1.111	39.22	4.24	0.167	3,700	0.28	3.36	37.9	55
MG(1)8012ZR-(2)15	12	1.236	43.61	4.90	0.193	4,000	0.35	4.20	39.7	55
MG(1)8012UR-(2)15	12	1.548	54.65	7.57	0.298	5,000	0.50	6.00	45.8	55
MG(1)8012LF-(2)15	12	0.710	25.07	1.77	0.070	2,400	0.10	1.20	25.7	55
MG(1)8012MF-(2)15	12	0.802	28.31	2.37	0.093	2,700	0.13	1.56	29.2	55
MG(1)8012HF-(2)15	12	0.914	32.27	2.93	0.115	3,000	0.18	2.16	32.4	55
MG(1)8012XF-(2)15	12	1.031	36.40	3.67	0.145	3,400	0.23	2.76	35.4	55
MG(1)8012YF-(2)15	12	1.111	39.22	4.24	0.167	3,700	0.28	3.36	37.7	55
MG(1)8012ZF-(2)15	12	1.236	43.61	4.90	0.193	4,000	0.35	4.20	39.5	55
MG(1)8012UF-(2)15	12	1.548	54.65	7.57	0.298	5,000	0.50	6.00	45.6	55
MG(1)8024LB-(2)15	24	0.710	25.07	1.77	0.070	2,400	0.08	1.92	26.1	55
MG(1)8024MB-(2)15	24	0.802	28.31	2.37	0.093	2,700	0.10	2.40	29.6	55
MG(1)8024HB-(2)15	24	0.914	32.27	2.93	0.115	3,000	0.12	2.88	32.8	55
MG(1)8024XB-(2)15	24	1.031	36.40	3.67	0.145	3,400	0.16	3.84	35.8	55
MG(1)8024YB-(2)15	24	1.111	39.22	4.24	0.167	3,700	0.19	4.56	38.1	55
MG(1)8024ZB-(2)15	24	1.236	43.61	4.90	0.193	4,000	0.23	5.52	39.9	55
MG(1)8024LR-(2)15	24	0.710	25.07	1.77	0.070	2,400	0.08	1.92	25.9	55
MG(1)8024MR-(2)15	24	0.802	28.31	2.37	0.093	2,700	0.10	2.40	29.4	55
MG(1)8024HR-(2)15	24	0.914	32.27	2.93	0.115	3,000	0.12	2.88	32.6	55
MG(1)8024XR-(2)15	24	1.031	36.40	3.67	0.145	3,400	0.16	3.84	35.6	55
MG(1)8024YR-(2)15	24	1.111	39.22	4.24	0.167	3,700	0.19	4.56	37.9	55
MG(1)8024ZR-(2)15	24	1.236	43.61	4.90	0.193	4,000	0.23	5.52	39.7	55
MG(1)8024LF-(2)15	24	0.710	25.07	1.77	0.070	2,400	0.08	1.92	25.7	55
MG(1)8024MF-(2)15	24	0.802	28.31	2.37	0.093	2,700	0.10	2.40	29.2	55
MG(1)8024HF-(2)15	24	0.914	32.27	2.93	0.115	3,000	0.12	2.88	32.4	55
MG(1)8024XF-(2)15	24	1.031	36.40	3.67	0.145	3,400	0.16	3.84	35.4	55
MG(1)8024YF-(2)15	24	1.111	39.22	4.24	0.167	3,700	0.19	4.56	37.7	55
MG(1)8024ZF-(2)15	24	1.236	43.61	4.90	0.193	4,000	0.23	5.52	39.5	55

Remarks:

(1)-Electric Characteristics:

A: Standard 2-Pin; **T**: Frequency Generation 3-Pin or more.

(2)-Function:

A: None Automatic Restart;
O: Automatic Restart & Locked Current Protection;
R: Rotate Detection Automatic Restart & Locked Current Protection;
S: Thermo-Control Speed, Automatic Restart & Locked Current Protection;
W: Pulse Width Modulation & Automatic Restart & Locked Current Protection (PWM).

The spec is for reference only, it's subject to change without any prior notice

80x80x20mm series B

Bearing Type	☑ 2 Ball	☐ Sleeve	☑ Rifle	☑ FDB
Speed Control	☑ Voltage	☑ Temperature	☑ PWM	
	☐ ±5% Speed tolerance		☑ ±10% Speed tolerance	
Frame Type	☑ 4 Screw	☑ 8 Screw		
Signal output	☑ Alarm Signal	☑ Tacho Signal		
Protection	☑ Lock	☑ Reverse	☐ Over Voltage	☐ Over heat
ESD ①	☐ Class Ⅰ	☐ Class Ⅱ	☑ Class Ⅲ	
Insulation ②	☑ Class A	☐ Class B	☐ Class C	☐ Class F
Safety	☑ UL	☑ TUV	☑ CE	☐ VDE
Motor type	☑ Uni-phase	☑ 2 phase	☐ 3 phase	

AIR FLOW/STATIC-PRESSURE

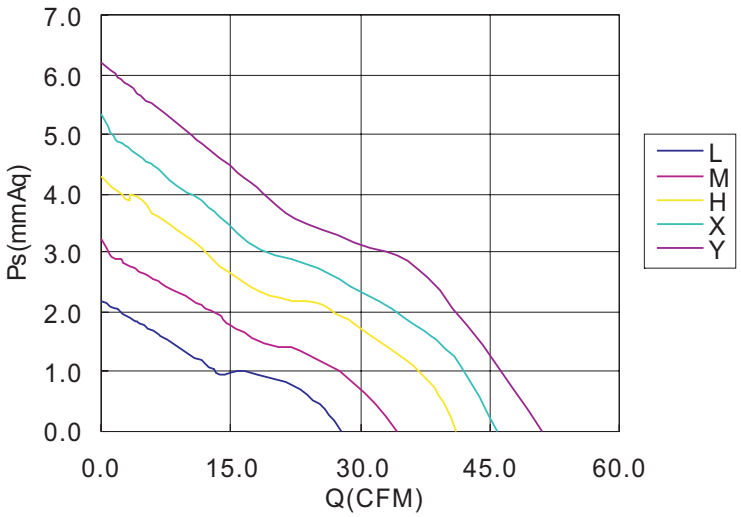

OUTLINE(mm)

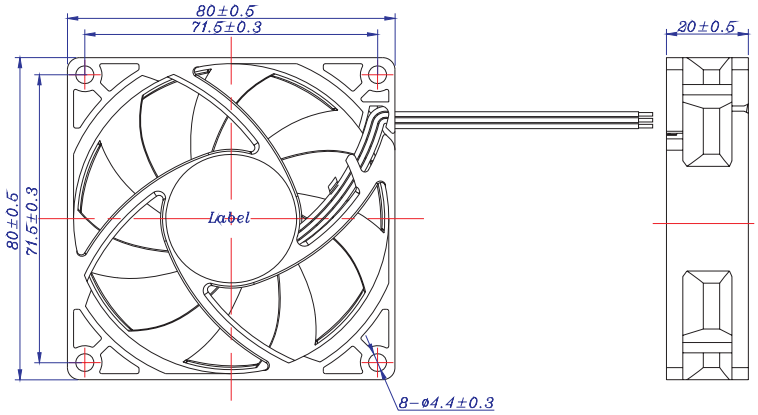

Note:

①-Reference standard: IEC 61000-4-2

②-Reference standard: UL 1446

Item No.	Operating Voltage	Maximum Air Flow		Maximum Air Pressure		Speed	Rated Current	Input Power	Noise	Weight
	(V)	(CMM)	(CFM)	(mmAq)	(inchAq)	(rpm)	(A)	(W)	dB(A)	(g)
MG(1)8012LF-(2)20	12	0.831	29.32	2.20	0.087	2,500	0.15	1.80	28.0	70
MG(1)8012MF-(2)20	12	0.971	34.27	3.22	0.127	3,000	0.21	2.52	31.4	70
MG(1)8012HF-(2)20	12	1.169	41.27	4.28	0.169	3,500	0.27	3.24	35.3	70
MG(1)8012XF-(2)20	12	1.301	45.91	5.35	0.211	3,900	0.36	4.32	37.8	70
MG(1)8012YF-(2)20	12	1.448	51.12	6.22	0.245	4,300	0.48	5.76	40.9	70
MG(1)8012LR-(2)20	12	0.831	29.32	2.20	0.087	2,500	0.15	1.80	28.1	70
MG(1)8012MR-(2)20	12	0.971	34.27	3.22	0.127	3,000	0.21	2.52	31.5	70
MG(1)8012HR-(2)20	12	1.169	41.27	4.28	0.169	3,500	0.27	3.24	35.4	70
MG(1)8012XR-(2)20	12	1.301	45.91	5.35	0.211	3,900	0.36	4.32	37.9	70
MG(1)8012YR-(2)20	12	1.448	51.12	6.22	0.245	4,300	0.48	5.76	41.0	70
MG(1)8012LB-(2)20	12	0.831	29.32	2.20	0.087	2,500	0.15	1.80	28.3	70
MG(1)8012MB-(2)20	12	0.971	34.27	3.22	0.127	3,000	0.21	2.52	31.7	70
MG(1)8012HB-(2)20	12	1.169	41.27	4.28	0.169	3,500	0.27	3.24	35.6	70
MG(1)8012XB-(2)20	12	1.301	45.91	5.35	0.211	3,900	0.36	4.32	38.1	70
MG(1)8012YB-(2)20	12	1.448	51.12	6.22	0.245	4,300	0.48	5.76	41.1	70
MG(1)8024LF-(2)20	24	0.831	29.32	2.20	0.087	2,500	0.10	2.40	28.0	70
MG(1)8024MF-(2)20	24	0.971	34.27	3.22	0.127	3,000	0.13	3.12	31.4	70
MG(1)8024HF-(2)20	24	1.169	41.27	4.28	0.169	3,500	0.19	4.56	35.3	70
MG(1)8024XF-(2)20	24	1.301	45.91	5.35	0.211	3,900	0.21	5.04	37.8	70
MG(1)8024YF-(2)20	24	1.448	51.12	6.22	0.245	4,300	0.28	6.72	40.9	70
MG(1)8024LR-(2)20	24	0.831	29.32	2.20	0.087	2,500	0.10	2.40	28.1	70
MG(1)8024MR-(2)20	24	0.971	34.27	3.22	0.127	3,000	0.13	3.12	31.5	70
MG(1)8024HR-(2)20	24	1.169	41.27	4.28	0.169	3,500	0.19	4.56	35.4	70
MG(1)8024XR-(2)20	24	1.301	45.91	5.35	0.211	3,900	0.21	5.04	37.9	70
MG(1)8024YR-(2)20	24	1.448	51.12	6.22	0.245	4,300	0.28	6.72	41.0	70
MG(1)8024LB-(2)20	24	0.831	29.32	2.20	0.087	2,500	0.10	2.40	28.3	70
MG(1)8024MB-(2)20	24	0.971	34.27	3.22	0.127	3,000	0.13	3.12	31.7	70
MG(1)8024HB-(2)20	24	1.169	41.27	4.28	0.169	3,500	0.19	4.56	35.6	70
MG(1)8024XB-(2)20	24	1.301	45.91	5.35	0.211	3,900	0.21	5.04	38.1	70
MG(1)8024YB-(2)20	24	1.448	51.12	6.22	0.245	4,300	0.28	6.72	41.1	70

Remarks:

(1)-Electric Characteristics:

A: Standard 2-Pin; **T**: Frequency Generation 3-Pin or more.

(2)-Function:

A: None Automatic Restart;
O: Automatic Restart & Locked Current Protection;
R: Rotate Detection Automatic Restart & Locked Current Protection;
S: Thermo-Control Speed, Automatic Restart & Locked Current Protection;
W: Pulse Width Modulation & Automatic Restart & Locked Current Protection (PWM).

The spec is for reference only, it's subject to change without any prior notice

80x80x20mm series C

Bearing Type	☐ 2 Ball	☐ Sleeve	☑ Rifle	☐ FDB
Speed Control	☑ Voltage	☑ Temperature	☑ PWM	
	☐ ±5% Speed tolerance		☑ ±10% Speed tolerance	
Frame Type	☑ 4 Screw	☑ 8 Screw		
Signal output	☑ Alarm Signal	☑ Tacho Signal		
Protection	☑ Lock	☑ Reverse	☐ Over Voltage	☐ Over heat
ESD ①	☐ Class Ⅰ	☐ Class Ⅱ	☑ Class Ⅲ	
Insulation ②	☑ Class A	☐ Class B	☐ Class C	☐ Class F
Safety	☑ UL	☑ TUV	☑ CE	☐ VDE
Motor type	☑ Uni-phase	☑ 2 phase	☐ 3 phase	

AIR FLOW/STATIC-PRESSURE

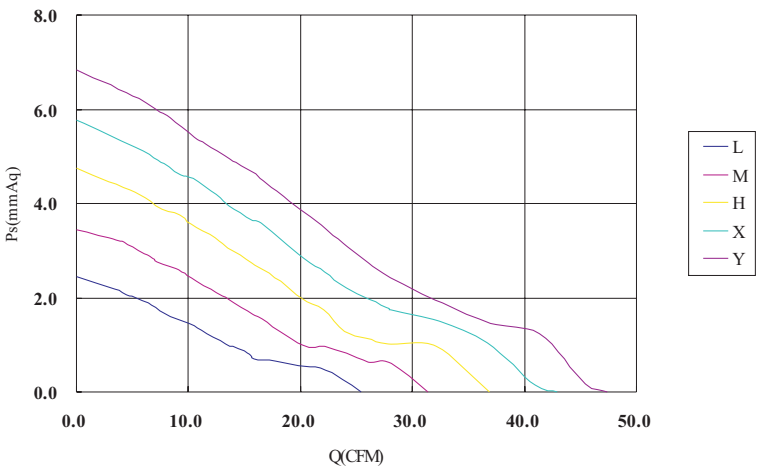

OUTLINE(mm)

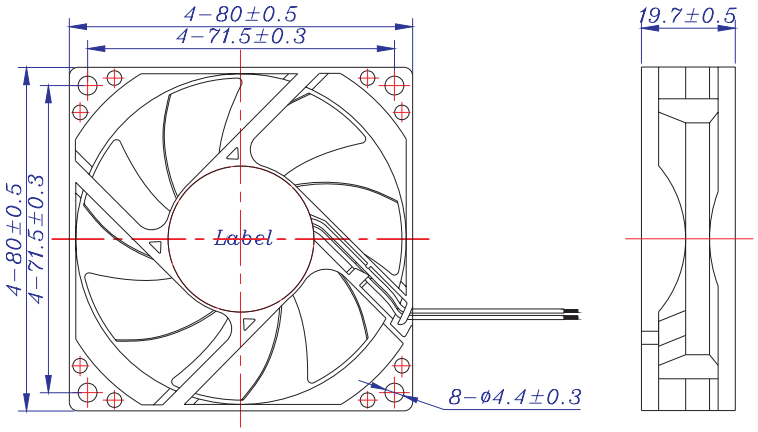

Note:

①-Reference standard: IEC 61000-4-2

②-Reference standard: UL 1446

Item No.	Operating Voltage	Maximum Air Flow		Maximum Air Pressure		Speed	Rated Current	Input Power	Noise	Weight
	(V)	(CMM)	(CFM)	(mmAq)	(inchAq)	(rpm)	(A)	(W)	dB(A)	(g)
MG(1)8012LR-(2)20	12	0.721	25.44	2.45	0.096	2,500	0.15	1.80	29.2	64
MG(1)8012MR-(2)20	12	0.890	31.41	3.45	0.136	3,000	0.21	2.52	33.6	64
MG(1)8012HR-(2)20	12	1.044	36.87	4.76	0.187	3,500	0.27	3.24	38.1	64
MG(1)8012XR-(2)20	12	1.215	42.90	5.78	0.228	3,900	0.36	4.32	40.8	64
MG(1)8012YR-(2)20	12	1.342	47.36	6.84	0.269	4,300	0.48	5.76	43.7	64
MG(1)8024LR-(2)20	24	0.721	25.44	2.45	0.096	2,500	0.10	2.40	29.2	64
MG(1)8024MR-(2)20	24	0.890	31.41	3.45	0.136	3,000	0.13	3.12	33.6	64
MG(1)8024HR-(2)20	24	1.044	36.87	4.76	0.187	3,500	0.19	4.56	38.1	64
MG(1)8024XR-(2)20	24	1.215	42.90	5.78	0.228	3,900	0.21	5.04	40.8	64
MG(1)8024YR-(2)20	24	1.342	47.36	6.84	0.269	4,300	0.28	6.72	43.7	64

Remarks:

(1)-Electric Characteristics:

A: Standard 2-Pin; **T**: Frequency Generation 3-Pin or more.

(2)-Function:

A: None Automatic Restart;
O: Automatic Restart & Locked Current Protection;
R: Rotate Detection Automatic Restart & Locked Current Protection;
S: Thermo-Control Speed, Automatic Restart & Locked Current Protection;
W: Pulse Width Modulation & Automatic Restart & Locked Current Protection (PWM).

The spec is for reference only, it's subject to change without any prior notice

80x80x20mm series D

Bearing Type	☐ 2 Ball	☐ Sleeve	☑ Rifle	☐ FDB
Speed Control	☑ Voltage	☑ Temperature	☑ PWM	
	☐ ±5% Speed tolerance		☑ ±10% Speed tolerance	
Frame Type	☑ 4 Screw	☑ 8 Screw		
Signal output	☑ Alarm Signal	☑ Tacho Signal		
Protection	☑ Lock	☑ Reverse	☐ Over Voltage	☐ Over heat
ESD ①	☐ Class Ⅰ	☐ Class Ⅱ	☑ Class Ⅲ	
Insulation ②	☑ Class A	☐ Class B	☐ Class C	☐ Class F
Safety	☑ UL	☑ TUV	☑ CE	☐ VDE
Motor type	☑ Uni-phase	☑ 2 phase	☐ 3 phase	

AIR FLOW/STATIC-PRESSURE

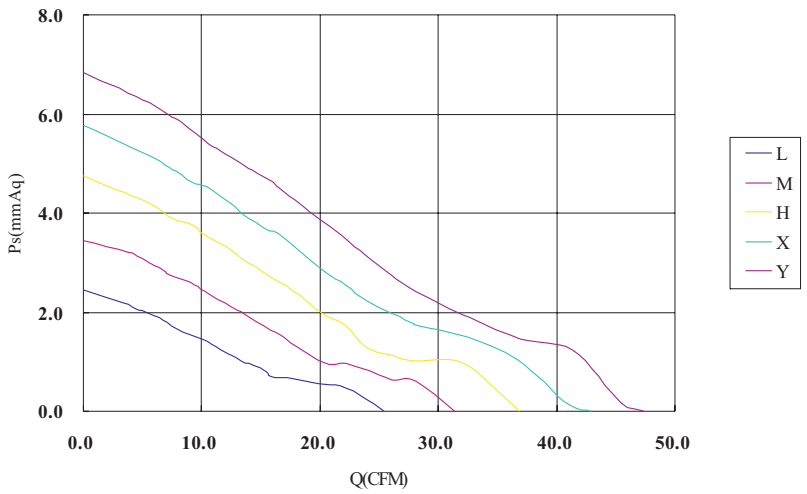

OUTLINE(mm)

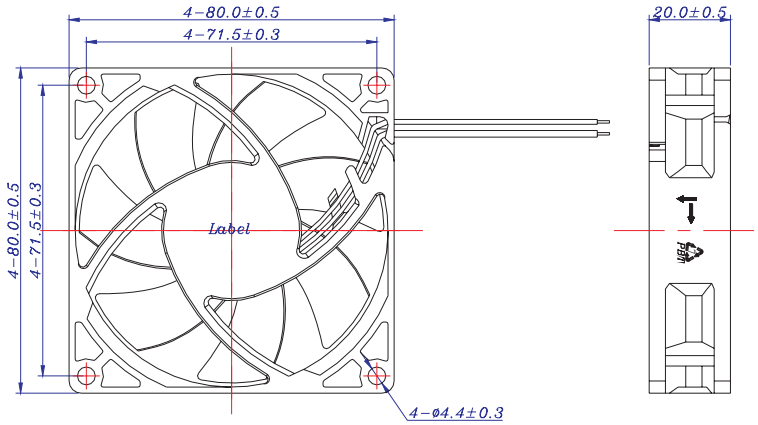

Note:

①-Reference standard: IEC 61000-4-2

②-Reference standard: UL 1446

Item No.	Operating Voltage	Maximum Air Flow		Maximum Air Pressure		Speed	Rated Current	Input Power	Noise	Weight
	(V)	(CMM)	(CFM)	(mmAq)	(inchAq)	(rpm)	(A)	(W)	dB(A)	(g)
MG(1)8012LR-(2)20	12	0.828	29.22	2.60	0.102	2,500	0.15	1.80	28.5	64
MG(1)8012MR-(2)20	12	0.977	34.49	3.64	0.143	3,000	0.21	2.52	32.7	64
MG(1)8012HR-(2)20	12	1.129	39.87	4.89	0.193	3,500	0.27	3.24	36.6	64
MG(1)8012XR-(2)20	12	1.275	44.99	5.94	0.234	3,900	0.36	4.32	39.8	64
MG(1)8012YR-(2)20	12	1.420	50.12	7.19	0.283	4,300	0.48	5.76	42.1	64
MG(1)8024LR-(2)20	24	0.828	29.22	2.60	0.102	2,500	0.10	2.40	28.5	64
MG(1)8024MR-(2)20	24	0.977	34.49	3.64	0.143	3,000	0.13	3.12	32.7	64
MG(1)8024HR-(2)20	24	1.129	39.87	4.89	0.193	3,500	0.19	4.56	36.6	64
MG(1)8024XR-(2)20	24	1.275	44.99	5.94	0.234	3,900	0.21	5.04	39.8	64
MG(1)8024YR-(2)20	24	1.420	50.12	7.19	0.283	4,300	0.28	6.72	42.1	64

Remarks:

(1)-Electric Characteristics:

A: Standard 2-Pin; **T**: Frequency Generation 3-Pin or more.

(2)-Function:

A: None Automatic Restart;
O: Automatic Restart & Locked Current Protection;
R: Rotate Detection Automatic Restart & Locked Current Protection;
S: Thermo-Control Speed, Automatic Restart & Locked Current Protection;
W: Pulse Width Modulation & Automatic Restart & Locked Current Protection (PWM).

The spec is for reference only, it's subject to change without any prior notice

80x80x25mm series B

Bearing Type	☑ 2 Ball	☐ Sleeve	☑ Rifle	☑ FDB
Speed Control	☑ Voltage	☑ Temperature	☑ PWM	
	☐ ±5% Speed tolerance		☑ ±10% Speed tolerance	
Frame Type	☑ 4 Screw	☑ 8 Screw		
Signal output	☑ Alarm Signal	☑ Tacho Signal		
Protection	☑ Lock	☑ Reverse	☐ Over Voltage	☐ Over heat
ESD ①	☐ Class Ⅰ	☐ Class Ⅱ	☑ Class Ⅲ	
Insulation ②	☑ Class A	☐ Class B	☐ Class C	☐ Class F
Safety	☑ UL	☑ TUV	☑ CE	☐ VDE
Motor type	☑ Uni-phase	☑ 2 phase	☐ 3 phase	

AIR FLOW/STATIC-PRESSURE

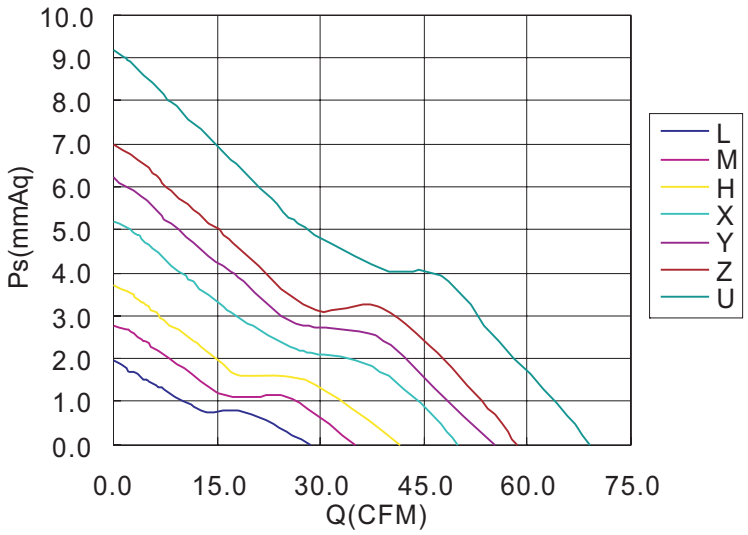

OUTLINE(mm)

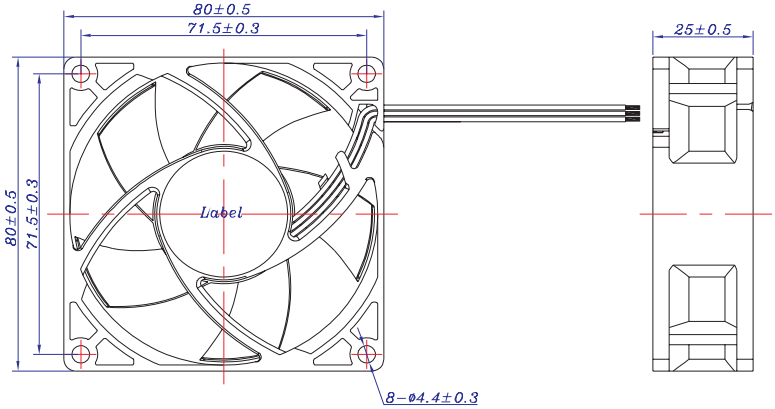

Note:

①-Reference standard: IEC 61000-4-2

②-Reference standard: UL 1446

Item No.	Operating Voltage	Maximum Air Flow		Maximum Air Pressure		Speed	Rated Current	Input Power	Noise	Weight
	(V)	(CMM)	(CFM)	(mmAq)	(inchAq)	(rpm)	(A)	(W)	dB(A)	(g)
MG(1)8005LF-(2)25	5	0.806	28.46	1.98	0.078	2,100	0.28	1.40	22.8	90
MG(1)8005MF-(2)25	5	0.987	34.85	2.79	0.110	2,500	0.32	1.60	28.7	90
MG(1)8005HF-(2)25	5	1.171	41.34	3.71	0.146	3,000	0.45	2.25	32.9	90
MG(1)8005LR-(2)25	5	0.806	28.46	1.98	0.078	2,100	0.28	1.40	22.9	90
MG(1)8005MR-(2)25	5	0.987	34.85	2.79	0.110	2,500	0.32	1.60	28.8	90
MG(1)8005HR-(2)25	5	1.171	41.34	3.71	0.146	3,000	0.45	2.25	33.0	90
MG(1)8005LB-(2)25	5	0.806	28.46	1.98	0.078	2,100	0.28	1.40	23.1	90
MG(1)8005MB-(2)25	5	0.987	34.85	2.79	0.110	2,500	0.32	1.60	29.0	90
MG(1)8005HB-(2)25	5	1.171	41.34	3.71	0.146	3,000	0.45	2.25	33.2	90
MG(1)8012LF-(2)25	12	0.806	28.46	1.98	0.078	2,100	0.12	1.44	22.8	90
MG(1)8012MF-(2)25	12	0.987	34.85	2.79	0.110	2,500	0.15	1.80	28.7	90
MG(1)8012HF-(2)25	12	1.171	41.34	3.71	0.146	3,000	0.24	2.88	32.9	90
MG(1)8012XF-(2)25	12	1.413	49.89	5.19	0.204	3,600	0.39	4.68	37.0	90
MG(1)8012YF-(2)25	12	1.562	55.13	6.21	0.244	3,900	0.42	5.04	38.9	90
MG(1)8012ZF-(2)25	12	1.653	58.35	7.00	0.276	4,200	0.54	6.48	42.0	90
MG(1)8012UF-(2)25	12	1.951	68.88	9.17	0.361	4,800	0.66	7.92	44.9	90
MG(1)8012LR-(2)25	12	0.806	28.46	1.98	0.078	2,100	0.12	1.44	22.9	90
MG(1)8012MR-(2)25	12	0.987	34.85	2.79	0.110	2,500	0.15	1.80	28.8	90
MG(1)8012HR-(2)25	12	1.171	41.34	3.71	0.146	3,000	0.24	2.88	33.0	90
MG(1)8012XR-(2)25	12	1.413	49.89	5.19	0.204	3,600	0.39	4.68	37.1	90
MG(1)8012YR-(2)25	12	1.562	55.13	6.21	0.244	3,900	0.42	5.04	39.0	90
MG(1)8012ZR-(2)25	12	1.653	58.35	7.00	0.276	4,200	0.54	6.48	42.1	90
MG(1)8012UR-(2)25	12	1.951	68.88	9.17	0.361	4,800	0.66	7.92	45.0	90
MG(1)8012LB-(2)25	12	0.806	28.46	1.98	0.078	2,100	0.12	1.44	23.1	90
MG(1)8012MB-(2)25	12	0.987	34.85	2.79	0.110	2,500	0.15	1.80	29.0	90
MG(1)8012HB-(2)25	12	1.171	41.34	3.71	0.146	3,000	0.24	2.88	33.2	90
MG(1)8012XB-(2)25	12	1.413	49.89	5.19	0.204	3,600	0.39	4.68	37.3	90
MG(1)8012YB-(2)25	12	1.562	55.13	6.21	0.244	3,900	0.42	5.04	39.2	90
MG(1)8012ZB-(2)25	12	1.653	58.35	7.00	0.276	4,200	0.54	6.48	42.3	90
MG(1)8012UB-(2)25	12	1.951	68.88	9.17	0.361	4,800	0.66	7.92	45.2	90

Remarks:

(1)-Electric Characteristics:

A: Standard 2-Pin; **T**: Frequency Generation 3-Pin or more.

(2)-Function:

A: None Automatic Restart;
O: Automatic Restart & Locked Current Protection;
R: Rotate Detection Automatic Restart & Locked Current Protection;
S: Thermo-Control Speed, Automatic Restart & Locked Current Protection;
W: Pulse Width Modulation & Automatic Restart & Locked Current Protection (PWM).

The spec is for reference only, it's subject to change without any prior notice

80x80x25mm series B

Bearing Type	☑ 2 Ball	☐ Sleeve	☑ Rifle	☑ FDB
Speed Control	☑ Voltage	☑ Temperature	☑ PWM	
	☐ ±5% Speed tolerance		☑ ±10% Speed tolerance	
Frame Type	☑ 4 Screw	☑ 8 Screw		
Signal output	☑ Alarm Signal	☑ Tacho Signal		
Protection	☑ Lock	☑ Reverse	☐ Over Voltage	☐ Over heat
ESD ①	☐ Class Ⅰ	☐ Class Ⅱ	☑ Class Ⅲ	
Insulation ②	☑ Class A	☐ Class B	☐ Class C	☐ Class F
Safety	☑ UL	☑ TUV	☑ CE	☐ VDE
Motor type	☑ Uni-phase	☑ 2 phase	☐ 3 phase	

AIR FLOW/STATIC-PRESSURE

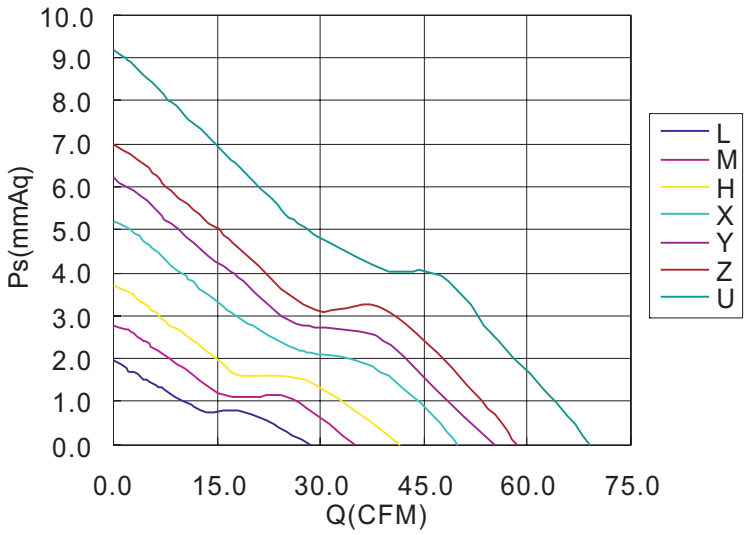

OUTLINE(mm)

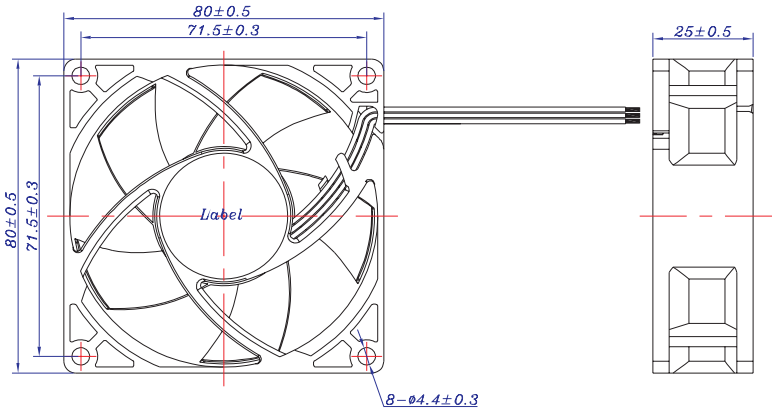

Note:

①-Reference standard: IEC 61000-4-2

②-Reference standard: UL 1446

Item No.	Operating Voltage	Maximum Air Flow		Maximum Air Pressure		Speed	Rated Current	Input Power	Noise	Weight
	(V)	(CMM)	(CFM)	(mmAq)	(inchAq)	(rpm)	(A)	(W)	dB(A)	(g)
MG(1)8024LF-(2)25	24	0.806	28.46	1.98	0.078	2,100	0.09	2.16	22.8	90
MG(1)8024MF-(2)25	24	0.987	34.85	2.79	0.110	2,500	0.11	2.64	28.7	90
MG(1)8024HF-(2)25	24	1.171	41.34	3.71	0.146	3,000	0.16	3.84	32.9	90
MG(1)8024XF-(2)25	24	1.413	49.89	5.19	0.204	3,600	0.23	5.52	37.0	90
MG(1)8024YF-(2)25	24	1.562	55.13	6.21	0.244	3,900	0.26	6.24	38.9	90
MG(1)8024ZF-(2)25	24	1.653	58.35	7.00	0.276	4,200	0.30	7.20	42.0	90
MG(1)8024UF-(2)25	24	1.951	68.88	9.17	0.361	4,800	0.48	11.52	44.9	90
MG(1)8024LR-(2)25	24	0.806	28.46	1.98	0.078	2,100	0.09	2.16	22.9	90
MG(1)8024MR-(2)25	24	0.987	34.85	2.79	0.110	2,500	0.11	2.64	28.8	90
MG(1)8024HR-(2)25	24	1.171	41.34	3.71	0.146	3,000	0.16	3.84	33.0	90
MG(1)8024XR-(2)25	24	1.413	49.89	5.19	0.204	3,600	0.23	5.52	37.1	90
MG(1)8024YR-(2)25	24	1.562	55.13	6.21	0.244	3,900	0.26	6.24	39.0	90
MG(1)8024ZR-(2)25	24	1.653	58.35	7.00	0.276	4,200	0.30	7.20	42.1	90
MG(1)8024UR-(2)25	24	1.951	68.88	9.17	0.361	4,800	0.48	11.52	45.0	90
MG(1)8024LB-(2)25	24	0.806	28.46	1.98	0.078	2,100	0.09	2.16	23.1	90
MG(1)8024MB-(2)25	24	0.987	34.85	2.79	0.110	2,500	0.11	2.64	29.0	90
MG(1)8024HB-(2)25	24	1.171	41.34	3.71	0.146	3,000	0.16	3.84	33.2	90
MG(1)8024XB-(2)25	24	1.413	49.89	5.19	0.204	3,600	0.23	5.52	37.3	90
MG(1)8024YB-(2)25	24	1.562	55.13	6.21	0.244	3,900	0.26	6.24	39.2	90
MG(1)8024ZB-(2)25	24	1.653	58.35	7.00	0.276	4,200	0.30	7.20	42.3	90
MG(1)8024UB-(2)25	24	1.951	68.88	9.17	0.361	4,800	0.48	11.52	45.2	90
MG(1)8048XF-(2)25	48	1.413	49.89	5.19	0.204	3,600	0.08	3.84	37.0	90
MG(1)8048YF-(2)25	48	1.562	55.13	6.21	0.244	3,900	0.13	6.24	38.9	90
MG(1)8048ZF-(2)25	48	1.653	58.35	7.00	0.276	4,200	0.18	8.64	42.0	90
MG(1)8048UF-(2)25	48	1.951	68.88	9.17	0.361	4,800	0.30	14.40	44.9	90
MG(1)8048XR-(2)25	48	1.413	49.89	5.19	0.204	3,600	0.08	3.84	37.1	90
MG(1)8048YR-(2)25	48	1.562	55.13	6.21	0.244	3,900	0.13	6.24	39.0	90
MG(1)8048ZR-(2)25	48	1.653	58.35	7.00	0.276	4,200	0.18	8.64	42.1	90
MG(1)8048UR-(2)25	48	1.951	68.88	9.17	0.361	4,800	0.30	14.40	45.0	90
MG(1)8048XB-(2)25	48	1.413	49.89	5.19	0.204	3,600	0.08	3.84	37.3	90
MG(1)8048YB-(2)25	48	1.562	55.13	6.21	0.244	3,900	0.13	6.24	39.2	90
MG(1)8048ZB-(2)25	48	1.653	58.35	7.00	0.276	4,200	0.18	8.64	42.3	90
MG(1)8048UB-(2)25	48	1.951	68.88	9.17	0.361	4,800	0.30	14.40	45.2	90

Remarks:

(1)-Electric Characteristics:

A: Standard 2-Pin; **T**: Frequency Generation 3-Pin or more.

(2)-Function:

A: None Automatic Restart;
O: Automatic Restart & Locked Current Protection;
R: Rotate Detection Automatic Restart & Locked Current Protection;
S: Thermo-Control Speed, Automatic Restart & Locked Current Protection;
W: Pulse Width Modulation & Automatic Restart & Locked Current Protection (PWM).

The spec is for reference only, it's subject to change without any prior notice

80x80x25mm series C

Bearing Type	☑ 2 Ball	☐ Sleeve	☐ Rifle	☐ FDB
Speed Control	☑ Voltage	☑ Temperature	☑ PWM	
	☐ ±5% Speed tolerance		☑ ±10% Speed tolerance	
Frame Type	☑ 4 Screw	☐ 8 Screw		
Signal output	☑ Alarm Signal	☑ Tacho Signal		
Protection	☑ Lock	☑ Reverse	☐ Over Voltage	☐ Over heat
ESD ①	☐ Class Ⅰ	☐ Class Ⅱ	☑ Class Ⅲ	
Insulation ②	☑ Class A	☐ Class B	☐ Class C	☐ Class F
Safety	☑ UL	☑ TUV	☑ CE	☐ VDE
Motor type	☑ Uni-phase	☑ 2 phase	☐ 3 phase	

AIR FLOW/STATIC-PRESSURE

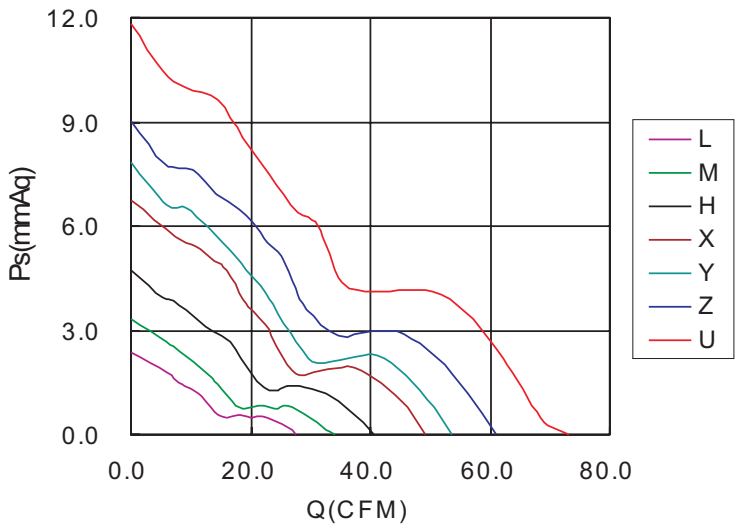

OUTLINE(mm)

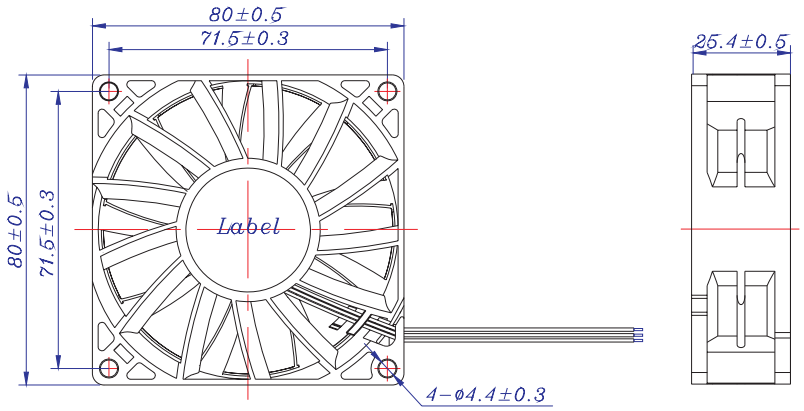

Note:

①-Reference standard: IEC 61000-4-2

②-Reference standard: UL 1446

Item No.	Operating Voltage	Maximum Air Flow		Maximum Air Pressure		Speed	Rated Current	Input Power	Noise	Weight
	(V)	(CMM)	(CFM)	(mmAq)	(inchAq)	(rpm)	(A)	(W)	dB(A)	(g)
MG(1)8005LB-(2)25	5	0.784	27.67	2.35	0.093	2,100	0.28	1.40	29.4	114
MG(1)8005MB-(2)25	5	0.967	34.12	3.31	0.130	2,500	0.32	1.60	34.5	114
MG(1)8005HB-(2)25	5	1.150	40.59	4.73	0.186	3,000	0.45	2.25	39.3	114
MG(1)8012LB-(2)25	12	0.784	27.67	2.35	0.093	2,100	0.12	1.44	29.4	114
MG(1)8012MB-(2)25	12	0.967	34.12	3.31	0.130	2,500	0.15	1.80	34.5	114
MG(1)8012HB-(2)25	12	1.150	40.59	4.73	0.186	3,000	0.24	2.88	39.3	114
MG(1)8012XB-(2)25	12	1.392	49.15	6.74	0.265	3,600	0.39	4.68	44.0	114
MG(1)8012YB-(2)25	12	1.518	53.59	7.82	0.308	3,900	0.42	5.04	45.5	114
MG(1)8012ZB-(2)25	12	1.729	61.05	9.02	0.355	4,200	0.54	6.48	47.9	114
MG(1)8012UB-(2)25	12	2.077	73.32	11.84	0.466	4,800	0.66	7.92	51.5	114
MG(1)8024LB-(2)25	24	0.784	27.67	2.35	0.093	2,100	0.09	2.16	29.4	114
MG(1)8024MB-(2)25	24	0.967	34.12	3.31	0.130	2,500	0.11	2.64	34.5	114
MG(1)8024HB-(2)25	24	1.150	40.59	4.73	0.186	3,000	0.16	3.84	39.3	114
MG(1)8024XB-(2)25	24	1.392	49.15	6.74	0.265	3,600	0.23	5.52	44.0	114
MG(1)8024YB-(2)25	24	1.518	53.59	7.82	0.308	3,900	0.26	6.24	45.5	114
MG(1)8024ZB-(2)25	24	1.729	61.05	9.02	0.355	4,200	0.30	7.20	47.9	114
MG(1)8024UB-(2)25	24	2.077	73.32	11.84	0.466	4,800	0.48	11.52	51.5	114
MG(1)8048XB-(2)25	48	1.392	49.15	6.74	0.265	3,600	0.08	3.84	44.0	114
MG(1)8048YB-(2)25	48	1.518	53.59	7.82	0.308	3,900	0.13	6.24	45.5	114
MG(1)8048ZB-(2)25	48	1.729	61.05	9.02	0.355	4,200	0.18	8.64	47.9	114
MG(1)8048UB-(2)25	48	2.077	73.32	11.84	0.466	4,800	0.30	14.40	51.5	114

Remarks:

(1)-Electric Characteristics:

A: Standard 2-Pin; **T**: Frequency Generation 3-Pin or more.

(2)-Function:

A: None Automatic Restart;
O: Automatic Restart & Locked Current Protection;
R: Rotate Detection Automatic Restart & Locked Current Protection;
S: Thermo-Control Speed, Automatic Restart & Locked Current Protection;
W: Pulse Width Modulation & Automatic Restart & Locked Current Protection (PWM).

The spec is for reference only, it's subject to change without any prior notice

80x80x25mm series D

Bearing Type	☐ 2 Ball	☐ Sleeve	☑ Rifle	☐ FDB
Speed Control	☑ Voltage	☑ Temperature	☑ PWM	
	☐ ±5% Speed tolerance		☑ ±10% Speed tolerance	
Frame Type	☑ 4 Screw	☑ 8 Screw		
Signal output	☑ Alarm Signal	☑ Tacho Signal		
Protection	☑ Lock	☑ Reverse	☐ Over Voltage	☐ Over heat
ESD ①	☐ Class Ⅰ	☐ Class Ⅱ	☑ Class Ⅲ	
Insulation ②	☑ Class A	☐ Class B	☐ Class C	☐ Class F
Safety	☑ UL	☑ TUV	☑ CE	☐ VDE
Motor type	☑ Uni-phase	☑ 2 phase	☐ 3 phase	

AIR FLOW/STATIC-PRESSURE

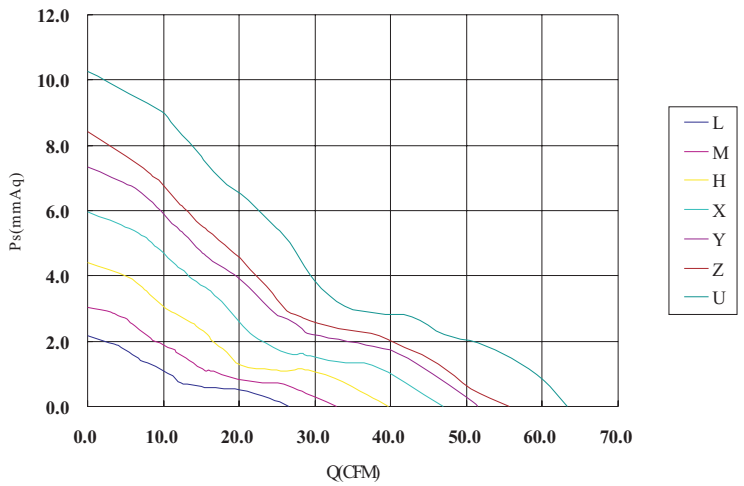

OUTLINE(mm)

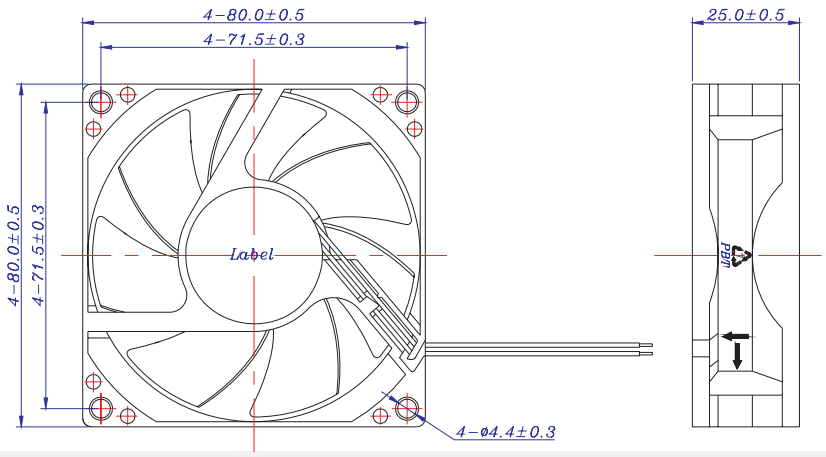

Note:

①-Reference standard: IEC 61000-4-2

②-Reference standard: UL 1446

Item No.	Operating Voltage	Maximum Air Flow		Maximum Air Pressure		Speed	Rated Current	Input Power	Noise	Weight
	(V)	(CMM)	(CFM)	(mmAq)	(inchAq)	(rpm)	(A)	(W)	dB(A)	(g)
MG(1)8012LR-(2)25	12	0.752	26.53	2.17	0.085	2,100	0.12	1.44	24.6	84
MG(1)8012MR-(2)25	12	0.929	32.81	3.04	0.120	2,500	0.15	1.80	30.3	84
MG(1)8012HR-(2)25	12	1.124	39.67	4.41	0.174	3,000	0.24	2.88	34.5	84
MG(1)8012XR-(2)25	12	1.328	46.87	5.96	0.235	3,600	0.39	4.68	39.5	84
MG(1)8012YR-(2)25	12	1.457	51.43	7.32	0.288	3,900	0.42	5.04	42.1	84
MG(1)8012ZR-(2)25	12	1.575	55.59	8.42	0.331	4,200	0.54	6.48	43.9	84
MG(1)8012UR-(2)25	12	1.793	63.29	10.27	0.404	4,800	0.66	7.92	48.5	84
MG(1)8024LR-(2)25	24	0.752	26.53	2.17	0.085	2,100	0.09	2.16	24.6	84
MG(1)8024MR-(2)25	24	0.929	32.81	3.04	0.120	2,500	0.11	2.64	30.3	84
MG(1)8024HR-(2)25	24	1.124	39.67	4.41	0.174	3,000	0.16	3.84	34.5	84
MG(1)8024XR-(2)25	24	1.328	46.87	5.96	0.235	3,600	0.23	5.52	39.5	84
MG(1)8024YR-(2)25	24	1.457	51.43	7.32	0.288	3,900	0.26	6.24	42.1	84
MG(1)8024ZR-(2)25	24	1.575	55.59	8.42	0.331	4,200	0.30	7.20	43.9	84
MG(1)8024UR-(2)25	24	1.793	63.29	10.27	0.404	4,800	0.48	11.52	48.5	84

Remarks:

(1)-Electric Characteristics:

A: Standard 2-Pin; **T**: Frequency Generation 3-Pin or more.

(2)-Function:

A: None Automatic Restart;
O: Automatic Restart & Locked Current Protection;
R: Rotate Detection Automatic Restart & Locked Current Protection;
S: Thermo-Control Speed, Automatic Restart & Locked Current Protection;
W: Pulse Width Modulation & Automatic Restart & Locked Current Protection (PWM).

The spec is for reference only, it's subject to change without any prior notice

80x80x25mm series E

Bearing Type	☐ 2 Ball	☐ Sleeve	☑ Rifle	☐ FDB
Speed Control	☑ Voltage	☑ Temperature	☑ PWM	
	☐ ±5% Speed tolerance		☑ ±10% Speed tolerance	
Frame Type	☑ 4 Screw	☑ 8 Screw		
Signal output	☑ Alarm Signal	☑ Tacho Signal		
Protection	☑ Lock	☑ Reverse	☐ Over Voltage	☐ Over heat
ESD ①	☐ Class Ⅰ	☐ Class Ⅱ	☑ Class Ⅲ	
Insulation ②	☑ Class A	☐ Class B	☐ Class C	☐ Class F
Safety	☑ UL	☑ TUV	☑ CE	☐ VDE
Motor type	☑ Uni-phase	☑ 2 phase	☐ 3 phase	

AIR FLOW/STATIC-PRESSURE

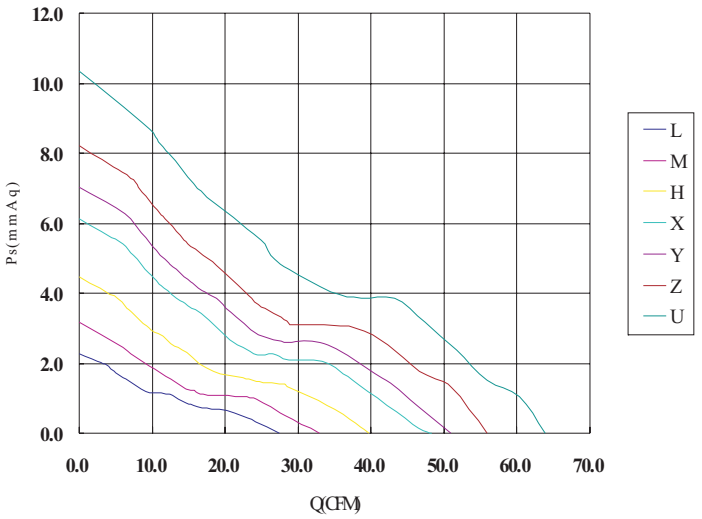

OUTLINE(mm)

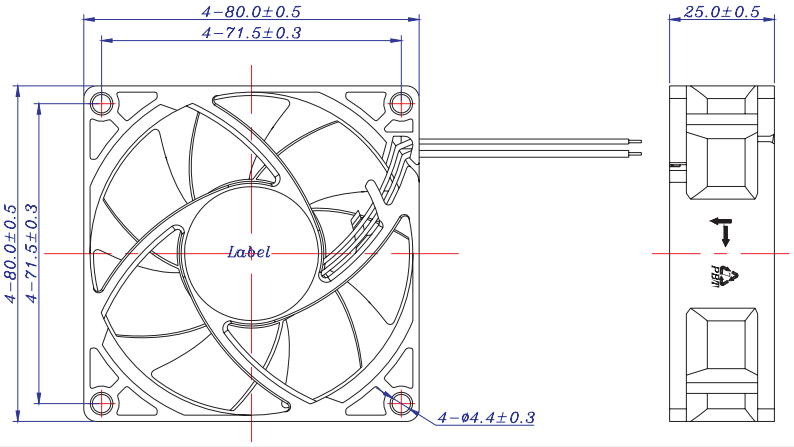

Note:

①-Reference standard: IEC 61000-4-2

②-Reference standard: UL 1446

Item No.	Operating Voltage	Maximum Air Flow		Maximum Air Pressure		Speed	Rated Current	Input Power	Noise	Weight
	(V)	(CMM)	(CFM)	(mmAq)	(inchAq)	(rpm)	(A)	(W)	dB(A)	(g)
MG(1)8012LR-(2)25	12	0.778	27.47	2.27	0.089	2,100	0.12	1.44	22.6	84
MG(1)8012MR-(2)25	12	0.933	32.92	3.17	0.125	2,500	0.15	1.80	28.2	84
MG(1)8012HR-(2)25	12	1.124	39.66	4.46	0.176	3,000	0.24	2.88	33.3	84
MG(1)8012XR-(2)25	12	1.367	48.27	6.13	0.241	3,600	0.39	4.68	38.6	84
MG(1)8012YR-(2)25	12	1.442	50.90	7.04	0.277	3,900	0.42	5.04	41.1	84
MG(1)8012ZR-(2)25	12	1.584	55.90	8.22	0.324	4,200	0.54	6.48	42.9	84
MG(1)8012UR-(2)25	12	1.810	63.91	10.33	0.407	4,800	0.66	7.92	47.6	84
MG(1)8024LR-(2)25	24	0.778	27.47	2.27	0.089	2,100	0.09	2.16	22.6	84
MG(1)8024MR-(2)25	24	0.933	32.92	3.17	0.125	2,500	0.11	2.64	28.2	84
MG(1)8024HR-(2)25	24	1.124	39.66	4.46	0.176	3,000	0.16	3.84	33.3	84
MG(1)8024XR-(2)25	24	1.367	48.27	6.13	0.241	3,600	0.23	5.52	38.6	84
MG(1)8024YR-(2)25	24	1.442	50.90	7.04	0.277	3,900	0.26	6.24	41.1	84
MG(1)8024ZR-(2)25	24	1.584	55.90	8.22	0.324	4,200	0.30	7.20	42.9	84
MG(1)8024UR-(2)25	24	1.810	63.91	10.33	0.407	4,800	0.48	11.52	47.6	84

Remarks:

(1)-Electric Characteristics:

A: Standard 2-Pin; **T**: Frequency Generation 3-Pin or more.

(2)-Function:

A: None Automatic Restart;
O: Automatic Restart & Locked Current Protection;
R: Rotate Detection Automatic Restart & Locked Current Protection;
S: Thermo-Control Speed, Automatic Restart & Locked Current Protection;
W: Pulse Width Modulation & Automatic Restart & Locked Current Protection (PWM).

The spec is for reference only, it's subject to change without any prior notice

80x80x38mm series B

Bearing Type	☑ 2 Ball	☐ Sleeve	☐ Rifle	☐ FDB
Speed Control	☑ Voltage	☐ Temperature	☑ PWM	
	☐ ±5% Speed tolerance		☑ ±10% Speed tolerance	
Frame Type	☐ 4 Screw	☑ 8 Screw		
Signal output	☑ Alarm Signal	☑ Tacho Signal		
Protection	☑ Lock	☑ Reverse	☐ Over Voltage	☐ Over heat
ESD ①	☐ Class Ⅰ	☐ Class Ⅱ	☑ Class Ⅲ	
Insulation ②	☑ Class A	☐ Class B	☐ Class C	☐ Class F
Safety	☑ UL	☑ TUV	☑ CE	☐ VDE
Motor type	☑ Uni-phase	☐ 2 phase	☐ 3 phase	

AIR FLOW/STATIC-PRESSURE

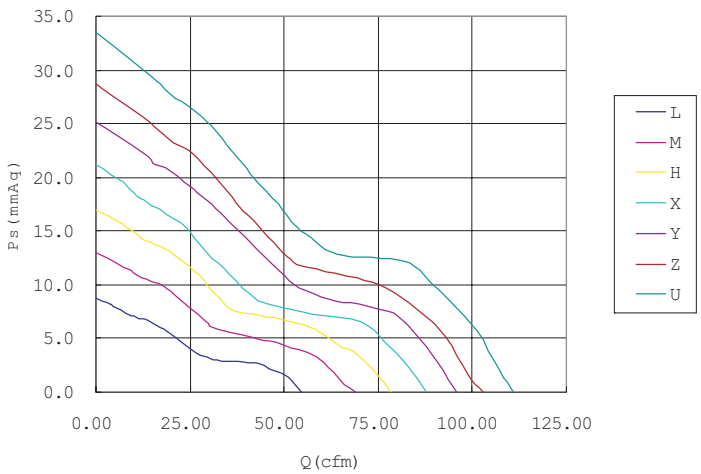

OUTLINE(mm)

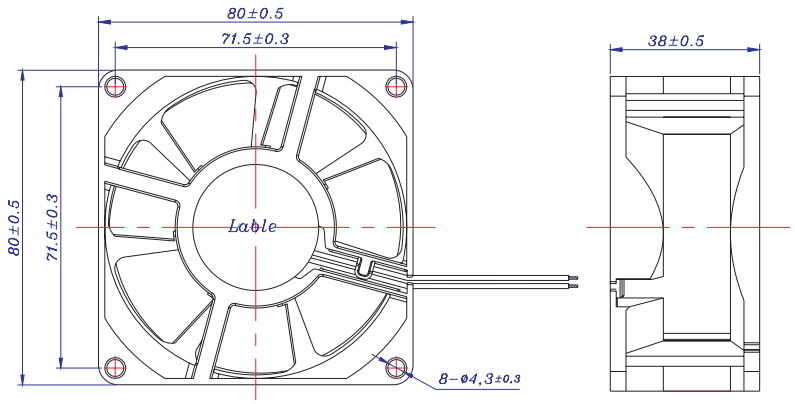

Note:

①-Reference standard: IEC 61000-4-2

②-Reference standard: UL 1446

Item No.	Operating Voltage	Maximum Air Flow		Maximum Air Pressure		Speed	Rated Current	Input Power	Noise	Weight
	(V)	(CMM)	(CFM)	(mmAq)	(inchAq)	(rpm)	(A)	(W)	dB(A)	(g)
MG(1)8012LB-(2)38	12	1.550	54.73	8.74	0.344	4,000	0.40	4.80	39.0	215
MG(1)8012MB-(2)38	12	1.954	68.98	12.98	0.511	4,800	0.54	6.48	45.8	215
MG(1)8012HB-(2)38	12	2.218	78.29	17.00	0.669	5,600	0.80	9.60	50.0	215
MG(1)8012XB-(2)38	12	2.488	87.83	21.20	0.835	6,300	1.20	14.40	53.5	215
MG(1)8012YB-(2)38	12	2.713	95.78	25.20	0.992	6,900	1.80	21.60	57.1	215
MG(1)8012ZB-(2)38	12	2.912	102.79	28.70	1.130	7,500	2.10	25.20	57.8	215
MG(1)8012UB-(2)38	12	3.146	111.04	33.50	1.319	8,100	2.60	31.20	59.1	215
MG(1)8024LB-(2)38	24	1.550	54.73	8.74	0.344	4,000	0.20	4.80	39.0	215
MG(1)8024MB-(2)38	24	1.954	68.98	12.98	0.511	4,800	0.32	7.68	45.8	215
MG(1)8024HB-(2)38	24	2.218	78.29	17.00	0.669	5,600	0.38	9.12	50.0	215
MG(1)8024XB-(2)38	24	2.488	87.83	21.20	0.835	6,300	0.54	12.96	53.5	215
MG(1)8024YB-(2)38	24	2.713	95.78	25.20	0.992	6,900	0.90	21.60	57.1	215
MG(1)8024ZB-(2)38	24	2.912	102.79	28.70	1.130	7,500	1.10	26.40	57.8	215
MG(1)8024UB-(2)38	24	3.146	111.04	33.50	1.319	8,100	1.30	31.20	59.1	215
MG(1)8048MB-(2)38	48	1.954	68.98	12.98	0.511	4,800	0.20	9.60	39.0	215
MG(1)8048HB-(2)38	48	2.218	78.29	17.00	0.669	5,600	0.24	11.52	45.8	215
MG(1)8048XB-(2)38	48	2.488	87.83	21.20	0.835	6,300	0.34	16.32	50.0	215
MG(1)8048YB-(2)38	48	2.713	95.78	25.20	0.992	6,900	0.52	24.96	53.5	215

Remarks:

(1)-Electric Characteristics:

A: Standard 2-Pin; **T**: Frequency Generation 3-Pin or more.

(2)-Function:

A: None Automatic Restart;
O: Automatic Restart & Locked Current Protection;
R: Rotate Detection Automatic Restart & Locked Current Protection;
S: Thermo-Control Speed, Automatic Restart & Locked Current Protection;
W: Pulse Width Modulation & Automatic Restart & Locked Current Protection (PWM).

The spec is for reference only, it's subject to change without any prior notice

92x92x20mm series

Bearing Type	☑ 2 Ball	☐ Sleeve	☑ Rifle	☑ FDB
Speed Control	☑ Voltage	☑ Temperature	☑ PWM	
	☐ ±5% Speed tolerance		☑ ±10% Speed tolerance	
Frame Type	☑ 4 Screw	☑ 8 Screw		
Signal output	☑ Alarm Signal	☑ Tacho Signal		
Protection	☑ Lock	☑ Reverse	☐ Over Voltage	☐ Over heat
ESD ①	☐ Class Ⅰ	☐ Class Ⅱ	☑ Class Ⅲ	
Insulation ②	☑ Class A	☐ Class B	☐ Class C	☐ Class F
Safety	☑ UL	☑ TUV	☑ CE	☐ VDE
Motor type	☑ Uni-phase	☑ 2 phase	☐ 3 phase	

AIR FLOW/STATIC-PRESSURE

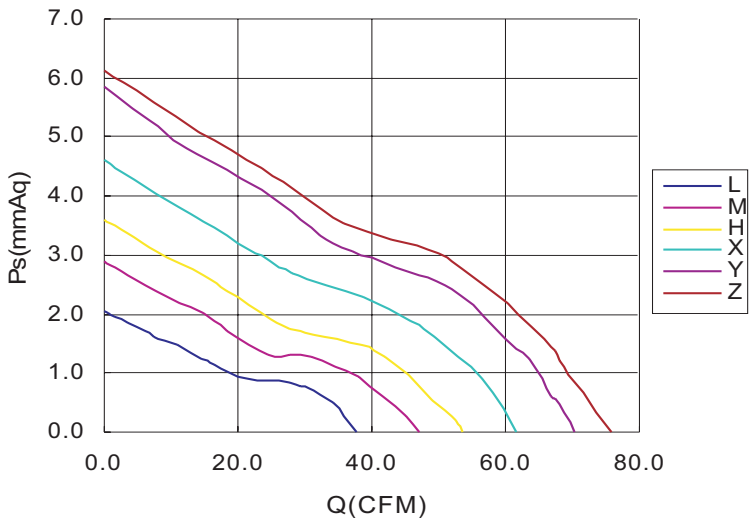

OUTLINE(mm)

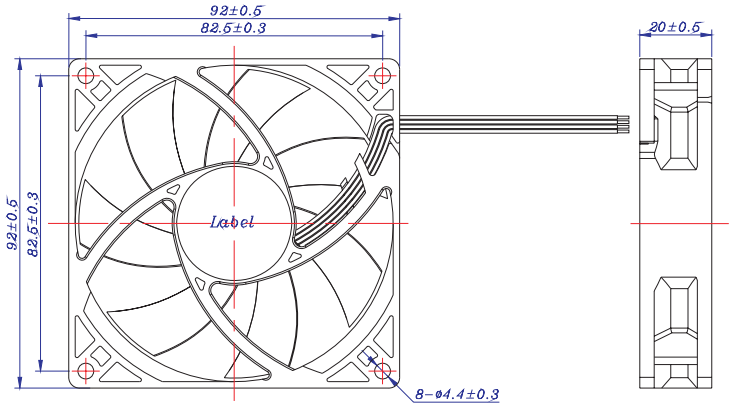

Note:

①-Reference standard: IEC 61000-4-2

②-Reference standard: UL 1446

Item No.	Operating Voltage	Maximum Air Flow		Maximum Air Pressure		Speed	Rated Current	Input Power	Noise	Weight
	(V)	(CMM)	(CFM)	(mmAq)	(inchAq)	(rpm)	(A)	(W)	dB(A)	(g)
MG(1)9212LF-(2)20	12	1.076	38.00	2.10	0.083	2,100	0.16	1.92	29.0	81
MG(1)9212MF-(2)20	12	1.331	47.00	2.90	0.114	2,500	0.25	3.00	32.7	81
MG(1)9212HF-(2)20	12	1.521	53.70	3.61	0.142	2,900	0.30	3.60	36.2	81
MG(1)9212XF-(2)20	12	1.743	61.55	4.62	0.182	3,400	0.38	4.56	40.2	81
MG(1)9212YF-(2)20	12	1.992	70.32	5.84	0.230	3,800	0.48	5.76	43.2	81
MG(1)9212ZF-(2)20	12	2.151	75.94	6.20	0.244	4,100	0.58	6.96	45.3	81
MG(1)9212LR-(2)20	12	1.076	38.00	2.10	0.083	2,100	0.16	1.92	29.1	81
MG(1)9212MR-(2)20	12	1.331	47.00	2.90	0.114	2,500	0.25	3.00	33.0	81
MG(1)9212HR-(2)20	12	1.521	53.70	3.61	0.142	2,900	0.30	3.60	36.4	81
MG(1)9212XR-(2)20	12	1.743	61.55	4.62	0.182	3,400	0.38	4.56	40.4	81
MG(1)9212YR-(2)20	12	1.992	70.32	5.84	0.230	3,800	0.48	5.76	43.4	81
MG(1)9212ZR-(2)20	12	2.151	75.94	6.20	0.244	4,100	0.58	6.96	45.4	81
MG(1)9212LB-(2)20	12	1.076	38.00	2.10	0.083	2,100	0.16	1.92	29.2	81
MG(1)9212MB-(2)20	12	1.331	47.00	2.90	0.114	2,500	0.25	3.00	33.3	81
MG(1)9212HB-(2)20	12	1.521	53.70	3.61	0.142	2,900	0.30	3.60	36.6	81
MG(1)9212XB-(2)20	12	1.743	61.55	4.62	0.182	3,400	0.38	4.56	40.5	81
MG(1)9212YB-(2)20	12	1.992	70.32	5.84	0.230	3,800	0.48	5.76	43.5	81
MG(1)9212ZB-(2)20	12	2.151	75.94	6.20	0.244	4,100	0.58	6.96	45.5	81
MG(1)9224LF-(2)20	24	1.076	38.00	2.10	0.083	2,100	0.13	3.12	29.0	81
MG(1)9224MF-(2)20	24	1.331	47.00	2.90	0.114	2,500	0.18	4.32	32.7	81
MG(1)9224HF-(2)20	24	1.521	53.70	3.61	0.142	2,900	0.24	5.76	36.2	81
MG(1)9224XF-(2)20	24	1.743	61.55	4.62	0.182	3,400	0.30	7.20	40.2	81
MG(1)9224YF-(2)20	24	1.992	70.32	5.84	0.230	3,800	0.40	9.60	43.2	81
MG(1)9224ZF-(2)20	24	2.151	75.94	6.20	0.244	4,100	0.50	12.00	45.3	81
MG(1)9224LR-(2)20	24	1.076	38.00	2.10	0.083	2,100	0.13	3.12	29.1	81
MG(1)9224MR-(2)20	24	1.331	47.00	2.90	0.114	2,500	0.18	4.32	33.0	81
MG(1)9224HR-(2)20	24	1.521	53.70	3.61	0.142	2,900	0.24	5.76	36.4	81
MG(1)9224XR-(2)20	24	1.743	61.55	4.62	0.182	3,400	0.30	7.20	40.4	81
MG(1)9224YR-(2)20	24	1.992	70.32	5.84	0.230	3,800	0.40	9.60	43.4	81
MG(1)9224ZR-(2)20	24	2.151	75.94	6.20	0.244	4,100	0.50	12.00	45.4	81
MG(1)9224LB-(2)20	24	1.076	38.00	2.10	0.083	2,100	0.13	3.12	29.2	81
MG(1)9224MB-(2)20	24	1.331	47.00	2.90	0.114	2,500	0.18	4.32	33.3	81
MG(1)9224HB-(2)20	24	1.521	53.70	3.61	0.142	2,900	0.24	5.76	36.6	81
MG(1)9224XB-(2)20	24	1.743	61.55	4.62	0.182	3,400	0.30	7.20	40.5	81
MG(1)9224YB-(2)20	24	1.992	70.32	5.84	0.230	3,800	0.40	9.60	43.5	81
MG(1)9224ZB-(2)20	24	2.151	75.94	6.20	0.244	4,100	0.50	12.00	45.5	81

Remarks:

(1)-Electric Characteristics:

A: Standard 2-Pin; **T**: Frequency Generation 3-Pin or more.

(2)-Function:

A: None Automatic Restart;
O: Automatic Restart & Locked Current Protection;
R: Rotate Detection Automatic Restart & Locked Current Protection;
S: Thermo-Control Speed, Automatic Restart & Locked Current Protection;
W: Pulse Width Modulation & Automatic Restart & Locked Current Protection (PWM).

The spec is for reference only, it's subject to change without any prior notice

92x92x25mm series B

Bearing Type	☑ 2 Ball	☐ Sleeve	☑ Rifle	☐ FDB
Speed Control	☑ Voltage	☑ Temperature	☑ PWM	
	☐ ±5% Speed tolerance		☑ ±10% Speed tolerance	
Frame Type	☑ 4 Screw	☑ 8 Screw		
Signal output	☑ Alarm Signal	☑ Tacho Signal		
Protection	☑ Lock	☑ Reverse	☐ Over Voltage	☐ Over heat
ESD ①	☐ Class Ⅰ	☐ Class Ⅱ	☑ Class Ⅲ	
Insulation ②	☑ Class A	☐ Class B	☐ Class C	☐ Class F
Safety	☑ UL	☑ TUV	☑ CE	☐ VDE
Motor type	☑ Uni-phase	☑ 2 phase	☐ 3 phase	

AIR FLOW/STATIC-PRESSURE

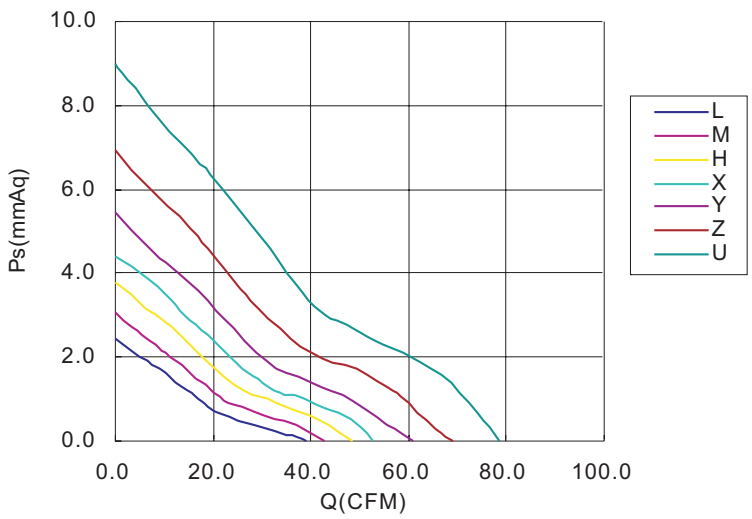

OUTLINE(mm)

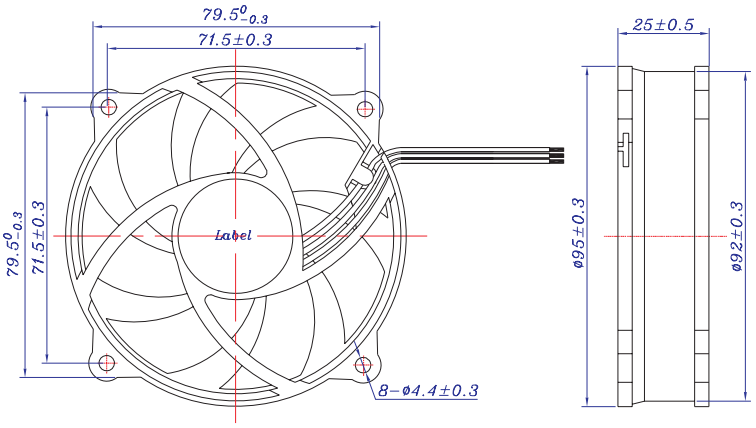

Note:

①-Reference standard: IEC 61000-4-2

②-Reference standard: UL 1446

Item No.	Operating Voltage	Maximum Air Flow		Maximum Air Pressure		Speed	Rated Current	Input Power	Noise	Weight
	(V)	(CMM)	(CFM)	(mmAq)	(inchAq)	(rpm)	(A)	(W)	dB(A)	(g)
MG(1)9212LR-(2)25	12	1.108	39.10	2.43	0.096	2,100	0.15	1.80	27.1	93
MG(1)9212MR-(2)25	12	1.213	42.81	3.04	0.120	2,300	0.17	2.04	29.7	93
MG(1)9212HR-(2)25	12	1.371	48.40	3.80	0.150	2,600	0.25	3.00	31.0	93
MG(1)9212XR-(2)25	12	1.474	52.03	4.41	0.174	2,900	0.32	3.84	33.5	93
MG(1)9212YR-(2)25	12	1.728	60.99	5.47	0.215	3,200	0.41	4.92	36.5	93
MG(1)9212ZR-(2)25	12	1.962	69.27	6.95	0.274	3,600	0.47	5.64	40.2	93
MG(1)9212UR-(2)25	12	2.229	78.69	9.01	0.355	4,200	0.54	6.48	44.8	93

Remarks:

(1)-Electric Characteristics:

A: Standard 2-Pin; **T**: Frequency Generation 3-Pin or more.

(2)-Function:

A: None Automatic Restart;
O: Automatic Restart & Locked Current Protection;
R: Rotate Detection Automatic Restart & Locked Current Protection;
S: Thermo-Control Speed, Automatic Restart & Locked Current Protection;
W: Pulse Width Modulation & Automatic Restart & Locked Current Protection (PWM).

The spec is for reference only, it's subject to change without any prior notice

92x92x25mm series C

Bearing Type	☑ 2 Ball	☐ Sleeve	☐ Rifle	☐ FDB
Speed Control	☑ Voltage	☑ Temperature	☑ PWM	
	☐ ±5% Speed tolerance		☑ ±10% Speed tolerance	
Frame Type	☐ 4 Screw	☑ 8 Screw		
Signal output	☑ Alarm Signal	☑ Tacho Signal		
Protection	☑ Lock	☑ Reverse	☐ Over Voltage	☐ Over heat
ESD ①	☐ Class Ⅰ	☐ Class Ⅱ	☑ Class Ⅲ	
Insulation ②	☑ Class A	☐ Class B	☐ Class C	☐ Class F
Safety	☑ UL	☑ TUV	☑ CE	☐ VDE
Motor type	☑ Uni-phase	☑ 2 phase	☐ 3 phase	

AIR FLOW/STATIC-PRESSURE

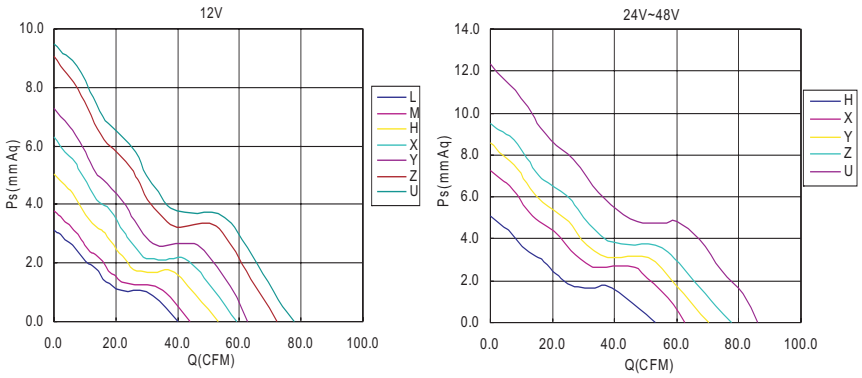

OUTLINE(mm)

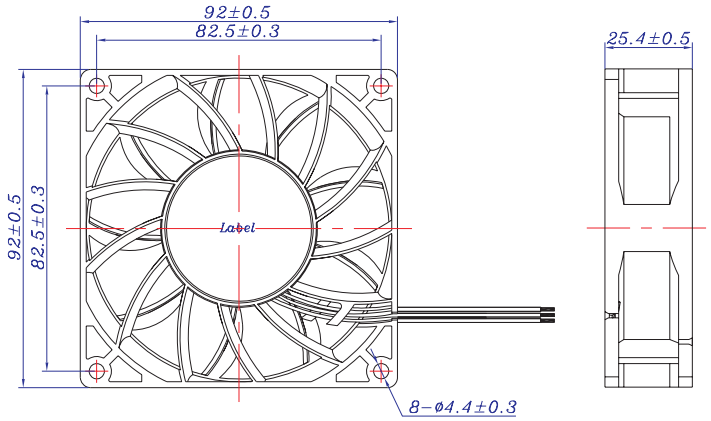

Note:

①-Reference standard: IEC 61000-4-2

②-Reference standard: UL 1446

Item No.	Operating Voltage	Maximum Air Flow		Maximum Air Pressure		Speed	Rated Current	Input Power	Noise	Weight
	(V)	(CMM)	(CFM)	(mmAq)	(inchAq)	(rpm)	(A)	(W)	dB(A)	(g)
MG(1)9212LB-(2)25	12	1.139	40.21	3.14	0.124	2,100	0.15	1.80	32.5	155
MG(1)9212MB-(2)25	12	1.247	44.04	3.77	0.148	2,300	0.17	2.04	35.1	155
MG(1)9212HB-(2)25	12	1.502	53.03	5.07	0.200	2,600	0.25	3.00	38.6	155
MG(1)9212XB-(2)25	12	1.675	59.15	6.31	0.248	2,900	0.32	3.84	41.1	155
MG(1)9212YB-(2)25	12	1.771	62.54	7.28	0.287	3,200	0.41	4.92	44.1	155
MG(1)9212ZB-(2)25	12	2.048	72.33	9.06	0.357	3,600	0.47	5.64	47.1	155
MG(1)9212UB-(2)25	12	2.202	77.76	9.49	0.374	3,800	0.54	6.48	48.8	155
MG(1)9224HB-(2)25	24	1.502	53.03	5.07	0.200	2,600	0.19	4.56	38.6	155
MG(1)9224XB-(2)25	24	1.771	62.54	7.28	0.287	3,200	0.22	5.28	44.1	155
MG(1)9224YB-(2)25	24	1.992	70.32	8.56	0.337	3,500	0.27	6.48	46.8	155
MG(1)9224ZB-(2)25	24	2.202	77.76	9.49	0.374	3,800	0.40	9.60	48.8	155
MG(1)9224UB-(2)25	24	2.443	86.25	12.37	0.487	4,300	0.48	11.52	52.9	155
MG(1)9248XB-(2)25	48	1.771	62.54	7.28	0.287	3,200	0.12	5.76	44.1	155
MG(1)9248YB-(2)25	48	1.992	70.32	8.56	0.337	3,500	0.16	7.68	46.8	155
MG(1)9248ZB-(2)25	48	2.202	77.76	9.49	0.374	3,800	0.20	9.60	48.8	155
MG(1)9248UB-(2)25	48	2.443	86.25	12.37	0.487	4,300	0.25	12.00	52.9	155

Remarks:

(1)-Electric Characteristics:

A: Standard 2-Pin; **T**: Frequency Generation 3-Pin or more.

(2)-Function:

A: None Automatic Restart;
O: Automatic Restart & Locked Current Protection;
R: Rotate Detection Automatic Restart & Locked Current Protection;
S: Thermo-Control Speed, Automatic Restart & Locked Current Protection;
W: Pulse Width Modulation & Automatic Restart & Locked Current Protection (PWM).

The spec is for reference only, it's subject to change without any prior notice

92x92x25mm series G

Bearing Type	☐ 2 Ball	☐ Sleeve	☑ Rifle	☐ FDB
Speed Control	☑ Voltage	☑ Temperature	☑ PWM	
	☐ ±5% Speed tolerance		☑ ±10% Speed tolerance	
Frame Type	☐ 4 Screw	☑ 8 Screw		
Signal output	☑ Alarm Signal	☑ Tacho Signal		
Protection	☑ Lock	☑ Reverse	☐ Over Voltage	☐ Over heat
ESD ①	☐ Class Ⅰ	☐ Class Ⅱ	☑ Class Ⅲ	
Insulation ②	☑ Class A	☐ Class B	☐ Class C	☐ Class F
Safety	☑ UL	☑ TUV	☑ CE	☐ VDE
Motor type	☑ Uni-phase	☑ 2 phase	☐ 3 phase	

AIR FLOW/STATIC-PRESSURE

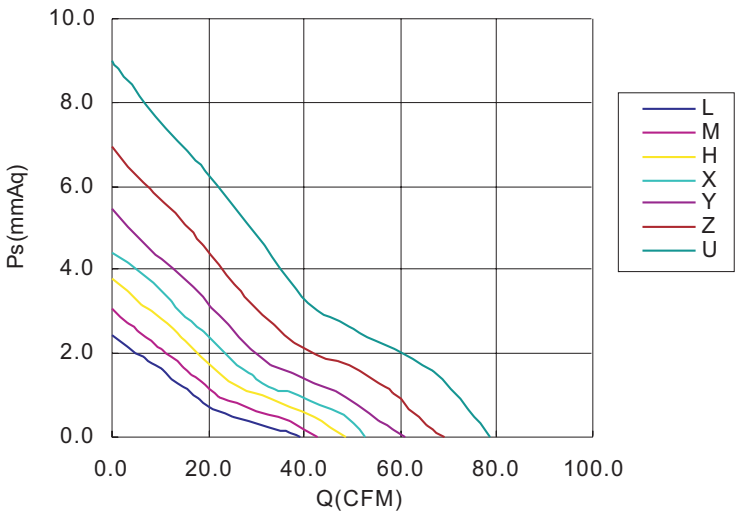

OUTLINE(mm)

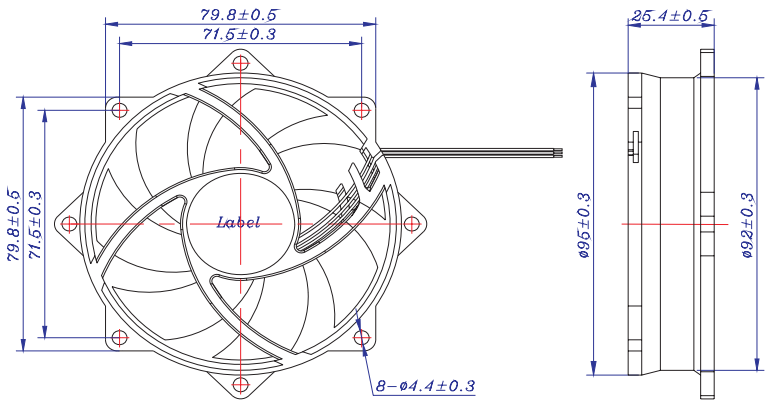

Note:

①-Reference standard: IEC 61000-4-2

②-Reference standard: UL 1446

Item No.	Operating Voltage	Maximum Air Flow		Maximum Air Pressure		Speed	Rated Current	Input Power	Noise	Weight
	(V)	(CMM)	(CFM)	(mmAq)	(inchAq)	(rpm)	(A)	(W)	dB(A)	(g)
MG(1)9212LR-(2)25	12	1.108	39.10	2.43	0.096	2,100	0.15	1.80	27.1	93
MG(1)9212MR-(2)25	12	1.213	42.81	3.04	0.120	2,300	0.17	2.04	29.7	93
MG(1)9212HR-(2)25	12	1.371	48.40	3.80	0.150	2,600	0.25	3.00	31.0	93
MG(1)9212XR-(2)25	12	1.474	52.03	4.41	0.174	2,900	0.32	3.84	33.5	93
MG(1)9212YR-(2)25	12	1.728	60.99	5.47	0.215	3,200	0.41	4.92	36.5	93
MG(1)9212ZR-(2)25	12	1.962	69.27	6.95	0.274	3,600	0.47	5.64	40.2	93
MG(1)9212UR-(2)25	12	2.229	78.69	9.01	0.355	4,200	0.54	6.48	44.8	93

Remarks:

(1)-Electric Characteristics:

A: Standard 2-Pin; **T**: Frequency Generation 3-Pin or more.

(2)-Function:

A: None Automatic Restart;
O: Automatic Restart & Locked Current Protection;
R: Rotate Detection Automatic Restart & Locked Current Protection;
S: Thermo-Control Speed, Automatic Restart & Locked Current Protection;
W: Pulse Width Modulation & Automatic Restart & Locked Current Protection (PWM).

The spec is for reference only, it's subject to change without any prior notice

92x92x25mm series H

Bearing Type	☑ 2 Ball	☐ Sleeve	☑ Rifle	☐ FDB
Speed Control	☑ Voltage	☐ Temperature	☑ PWM	
	☐ ±5% Speed tolerance		☑ ±10% Speed tolerance	
Frame Type	☑ 4 Screw	☑ 8 Screw		
Signal output	☑ Alarm Signal	☑ Tacho Signal		
Protection	☑ Lock	☑ Reverse	☐ Over Voltage	☐ Over heat
ESD ①	☐ Class Ⅰ	☐ Class Ⅱ	☑ Class Ⅲ	
Insulation ②	☑ Class A	☐ Class B	☐ Class C	☐ Class F
Safety	☑ UL	☑ TUV	☑ CE	☐ VDE
Motor type	☑ Uni-phase	☑ 2 phase	☐ 3 phase	

AIR FLOW/STATIC-PRESSURE

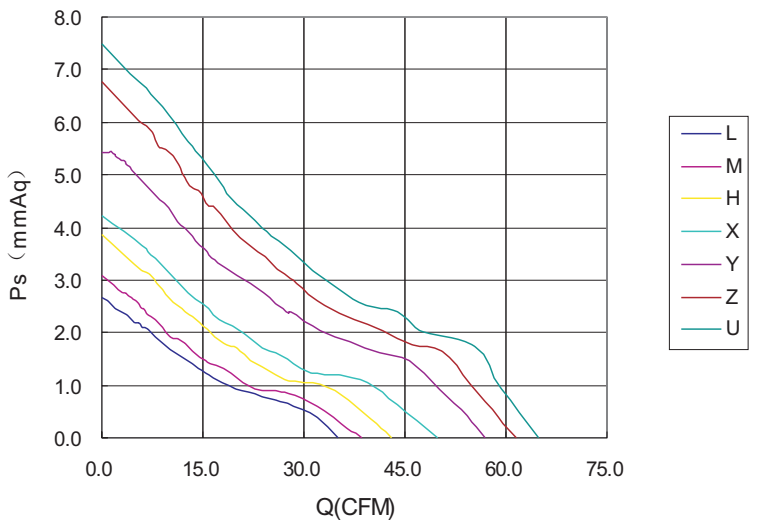

OUTLINE(mm)

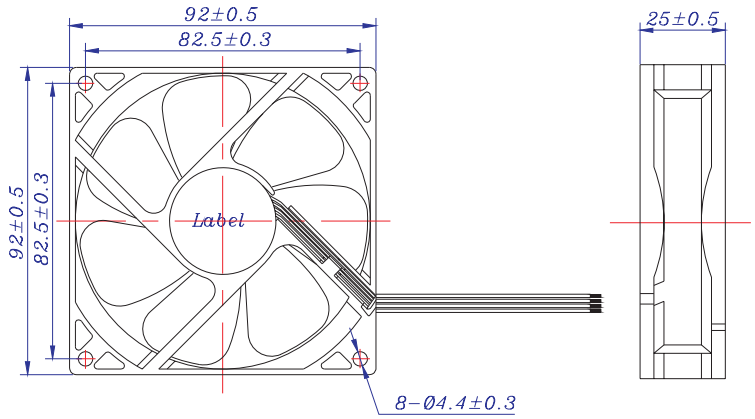

Note:

①-Reference standard: IEC 61000-4-2

②-Reference standard: UL 1446

Item No.	Operating Voltage	Maximum Air Flow		Maximum Air Pressure		Speed	Rated Current	Input Power	Noise	Weight
	(V)	(CMM)	(CFM)	(mmAq)	(inchAq)	(rpm)	(A)	(W)	dB(A)	(g)
MG(1)9212LR-(2)25	12	1.010	35.10	2.68	0.100	2,100	0.15	1.80	26.7	97
MG(1)9212MR-(2)25	12	1.090	38.50	3.08	0.120	2,300	0.17	2.04	30.7	97
MG(1)9212HR-(2)25	12	1.220	43.10	3.88	0.150	2,600	0.25	3.00	33.7	97
MG(1)9212XR-(2)25	12	1.400	49.70	4.22	0.170	2,900	0.32	3.84	36.1	97
MG(1)9212YR-(2)25	12	1.610	56.90	5.43	0.210	3,200	0.41	4.92	40.9	97
MG(1)9212ZR-(2)25	12	1.740	61.50	6.78	0.270	3,600	0.47	5.64	43.9	97
MG(1)9212UR-(2)25	12	1.830	64.80	7.50	0.290	3,800	0.54	6.48	45.6	97
MG(1)9212LB-(2)25	12	1.010	35.10	2.68	0.100	2,100	0.15	1.80	26.7	97
MG(1)9212MB-(2)25	12	1.090	38.50	3.08	0.120	2,300	0.17	2.04	30.7	97
MG(1)9212HB-(2)25	12	1.220	43.10	3.88	0.150	2,600	0.25	3.00	33.7	97
MG(1)9212XB-(2)25	12	1.400	49.70	4.22	0.170	2,900	0.32	3.84	36.1	97
MG(1)9212YB-(2)25	12	1.610	56.90	5.43	0.210	3,200	0.41	4.92	40.9	97
MG(1)9212ZB-(2)25	12	1.740	61.50	6.78	0.270	3,600	0.47	5.64	43.9	97
MG(1)9212UB-(2)25	12	1.830	64.80	7.50	0.290	3,800	0.54	6.48	45.6	97

Remarks:

(1)-Electric Characteristics:

A: Standard 2-Pin; **T**: Frequency Generation 3-Pin or more.

(2)-Function:

A: None Automatic Restart;
O: Automatic Restart & Locked Current Protection;
R: Rotate Detection Automatic Restart & Locked Current Protection;
S: Thermo-Control Speed, Automatic Restart & Locked Current Protection;
W: Pulse Width Modulation & Automatic Restart & Locked Current Protection (PWM).

The spec is for reference only, it's subject to change without any prior notice

92x92x38mm series B

Bearing Type	☑ 2 Ball	☐ Sleeve	☐ Rifle	☐ FDB
Speed Control	☑ Voltage	☐ Temperature	☑ PWM	
	☐ ±5% Speed tolerance		☑ ±10% Speed tolerance	
Frame Type	☐ 4 Screw	☑ 8 Screw		
Signal output	☑ Alarm Signal	☑ Tacho Signal		
Protection	☑ Lock	☑ Reverse	☐ Over Voltage	☐ Over heat
ESD ①	☐ Class Ⅰ	☑ Class Ⅱ	☐ Class Ⅲ	
Insulation ②	☑ Class A	☐ Class B	☐ Class C	☐ Class F
Safety	☑ UL	☑ TUV	☑ CE	☐ VDE
Motor type	☑ Uni-phase	☑ 2 phase	☐ 3 phase	

AIR FLOW/STATIC-PRESSURE

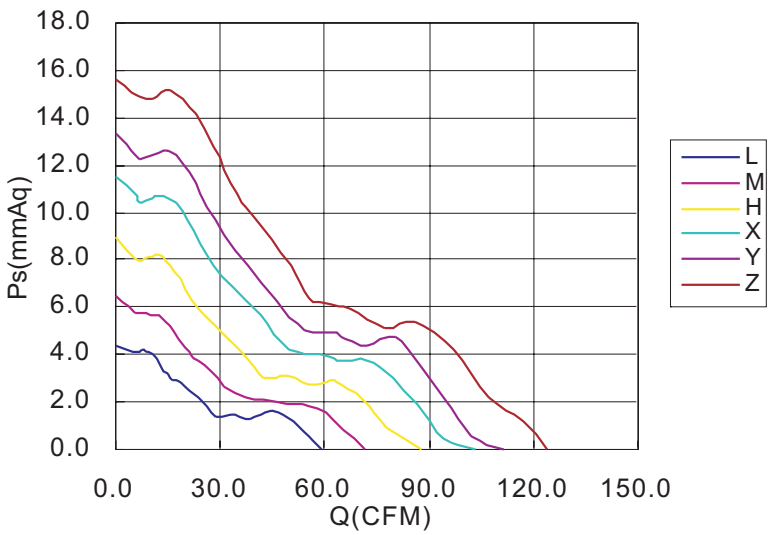

OUTLINE(mm)

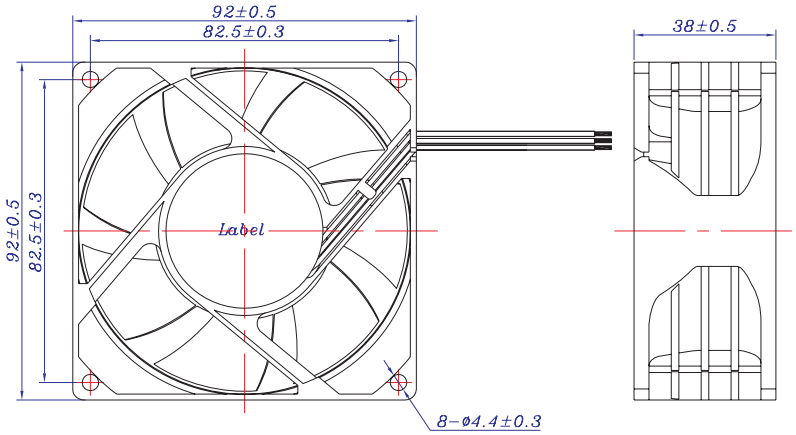

Note:

①-Reference standard: IEC 61000-4-2

②-Reference standard: UL 1446

Item No.	Operating Voltage	Maximum Air Flow		Maximum Air Pressure		Speed	Rated Current	Input Power	Noise	Weight
	(V)	(CMM)	(CFM)	(mmAq)	(inchAq)	(rpm)	(A)	(W)	dB(A)	(g)
MG(1)9212LB-(2)38	12	1.682	59.39	4.40	0.173	2,800	0.35	4.20	38.1	252
MG(1)9212MB-(2)38	12	2.028	71.59	6.50	0.256	3,200	0.50	6.00	42.1	252
MG(1)9212HB-(2)38	12	2.491	87.93	8.92	0.351	3,800	0.75	9.00	47.5	252
MG(1)9212XB-(2)38	12	2.929	103.40	11.50	0.453	4,400	1.00	12.00	51.3	252
MG(1)9212YB-(2)38	12	3.153	111.31	13.37	0.526	4,800	1.50	18.00	53.6	252
MG(1)9212ZB-(2)38	12	3.514	124.06	15.60	0.614	5,200	1.90	22.80	55.8	252
MG(1)9224MB-(2)38	24	2.028	71.59	6.50	0.256	3,200	0.28	6.72	42.1	252
MG(1)9224HB-(2)38	24	2.491	87.93	8.92	0.351	3,800	0.40	9.60	47.5	252
MG(1)9224XB-(2)38	24	2.929	103.40	11.50	0.453	4,400	0.50	12.00	51.3	252
MG(1)9224YB-(2)38	24	3.153	111.31	13.37	0.526	4,800	0.70	16.80	53.6	252
MG(1)9224ZB-(2)38	24	3.514	124.06	15.60	0.614	5,200	1.00	24.00	55.8	252
MG(1)9248MB-(2)38	48	2.028	71.59	6.50	0.256	3,200	0.20	9.60	42.1	252
MG(1)9248HB-(2)38	48	2.491	87.93	8.92	0.351	3,800	0.28	13.44	47.5	252
MG(1)9248XB-(2)38	48	2.929	103.40	11.50	0.453	4,400	0.36	17.28	51.3	252
MG(1)9248YB-(2)38	48	3.153	111.31	13.37	0.526	4,800	0.54	25.92	53.6	252
MG(1)9248ZB-(2)38	48	3.514	124.06	15.60	0.614	5,200	0.65	31.20	55.8	252

Remarks:

(1)-Electric Characteristics:

A: Standard 2-Pin; **T**: Frequency Generation 3-Pin or more.

(2)-Function:

A: None Automatic Restart;
O: Automatic Restart & Locked Current Protection;
R: Rotate Detection Automatic Restart & Locked Current Protection;
S: Thermo-Control Speed, Automatic Restart & Locked Current Protection;
W: Pulse Width Modulation & Automatic Restart & Locked Current Protection (PWM).

The spec is for reference only, it's subject to change without any prior notice

92x92x38mm series C

Bearing Type	☑ 2 Ball	☐ Sleeve	☐ Rifle	☐ FDB
Speed Control	☑ Voltage	☐ Temperature	☑ PWM	
	☐ ±5% Speed tolerance		☑ ±10% Speed tolerance	
Frame Type	☐ 4 Screw	☑ 8 Screw		
Signal output	☑ Alarm Signal	☑ Tacho Signal		
Protection	☑ Lock	☑ Reverse	☐ Over Voltage	☐ Over heat
ESD ①	☐ Class Ⅰ	☐ Class Ⅱ	☑ Class Ⅲ	
Insulation ②	☑ Class A	☐ Class B	☐ Class C	☐ Class F
Safety	☑ UL	☑ TUV	☑ CE	☐ VDE
Motor type	☑ Uni-phase	☐ 2 phase	☐ 3 phase	

AIR FLOW/STATIC-PRESSURE

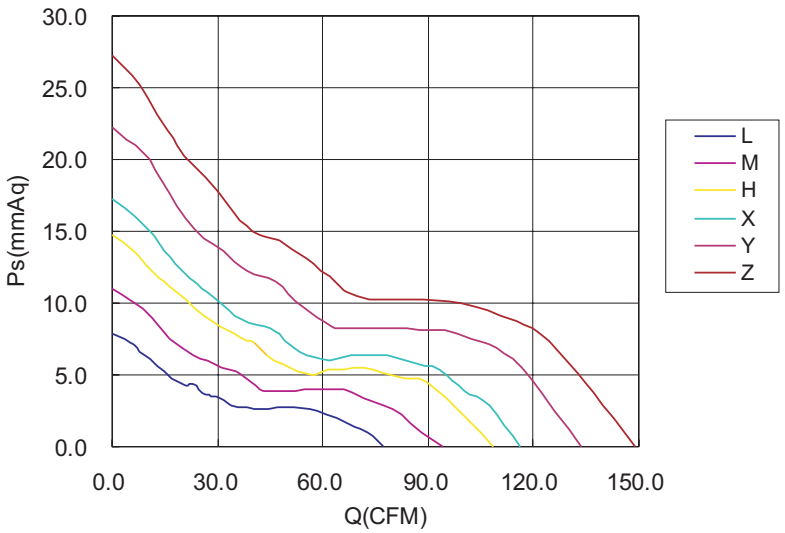

OUTLINE(mm)

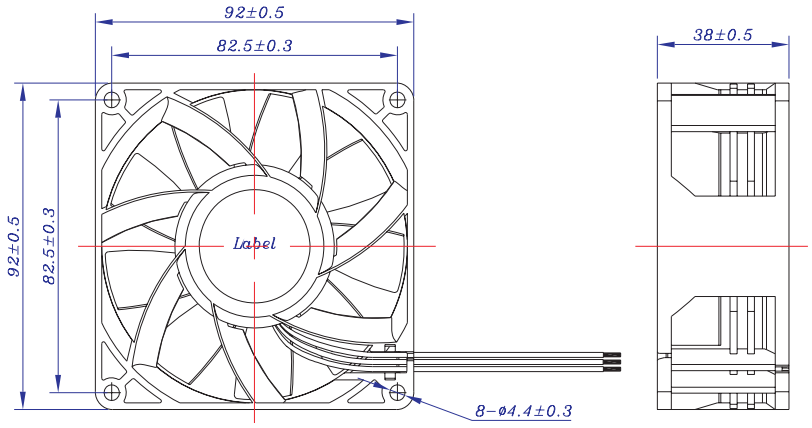

Note:

①-Reference standard: IEC 61000-4-2

②-Reference standard: UL 1446

Item No.	Operating Voltage	Maximum Air Flow		Maximum Air Pressure		Speed	Rated Current	Input Power	Noise	Weight
	(V)	(CMM)	(CFM)	(mmAq)	(inchAq)	(rpm)	(A)	(W)	dB(A)	(g)
MG(1)9212LB-(2)38	12	2.190	77.38	7.86	0.310	3,200	0.35	4.20	43.6	230
MG(1)9212MB-(2)38	12	2.660	94.13	11.05	0.435	3,800	0.50	6.00	49.0	230
MG(1)9212HB-(2)38	12	3.070	108.33	14.81	0.583	4,400	0.75	9.00	53.2	230
MG(1)9212XB-(2)38	12	3.280	116.03	17.30	0.681	4,800	1.00	12.00	55.5	230
MG(1)9212YB-(2)38	12	3.780	133.63	22.30	0.878	5,400	1.50	18.00	58.1	230
MG(1)9212ZB-(2)38	12	4.210	148.79	27.20	1.071	6,000	1.90	22.80	61.3	230
MG(1)9224LB-(2)38	24	2.190	77.38	7.86	0.310	3,200	0.18	4.32	43.6	230
MG(1)9224MB-(2)38	24	2.660	94.13	11.05	0.435	3,800	0.28	6.72	49.0	230
MG(1)9224HB-(2)38	24	3.070	108.33	14.81	0.583	4,400	0.40	9.60	53.2	230
MG(1)9224XB-(2)38	24	3.280	116.03	17.30	0.681	4,800	0.50	12.00	55.5	230
MG(1)9224YB-(2)38	24	3.780	133.63	22.30	0.878	5,400	0.70	16.80	58.1	230
MG(1)9224ZB-(2)38	24	4.210	148.79	27.20	1.071	6,000	1.00	24.00	61.3	230
MG(1)9248MB-(2)38	48	2.660	94.13	11.05	0.435	3,800	0.20	9.60	49.0	230
MG(1)9248HB-(2)38	48	3.070	108.33	14.81	0.583	4,400	0.28	13.44	53.2	230
MG(1)9248XB-(2)38	48	3.280	116.03	17.30	0.681	4,800	0.36	17.28	55.5	230
MG(1)9248YB-(2)38	48	3.780	133.63	22.30	0.878	5,400	0.54	25.92	58.1	230
MG(1)9248ZB-(2)38	48	4.210	148.79	27.20	1.071	6,000	0.65	31.20	61.3	230

Remarks:

(1)-Electric Characteristics:

A: Standard 2-Pin; **T**: Frequency Generation 3-Pin or more.

(2)-Function:

A: None Automatic Restart;
O: Automatic Restart & Locked Current Protection;
R: Rotate Detection Automatic Restart & Locked Current Protection;
S: Thermo-Control Speed, Automatic Restart & Locked Current Protection;
W: Pulse Width Modulation & Automatic Restart & Locked Current Protection (PWM).

The spec is for reference only, it's subject to change without any prior notice

92x92x38mm series D

Bearing Type	☑ 2 Ball	☐ Sleeve	☐ Rifle	☐ FDB
Speed Control	☑ Voltage	☐ Temperature	☑ PWM	
	☐ ±5% Speed tolerance		☑ ±10% Speed tolerance	
Frame Type	☐ 4 Screw	☑ 8 Screw		
Signal output	☑ Alarm Signal	☑ Tacho Signal		
Protection	☑ Lock	☑ Reverse	☐ Over Voltage	☐ Over heat
ESD ①	☐ Class Ⅰ	☐ Class Ⅱ	☑ Class Ⅲ	
Insulation ②	☑ Class A	☐ Class B	☐ Class C	☐ Class F
Safety	☑ UL	☑ TUV	☑ CE	☐ VDE
Motor type	☑ Uni-phase	☐ 2 phase	☐ 3 phase	

AIR FLOW/STATIC-PRESSURE

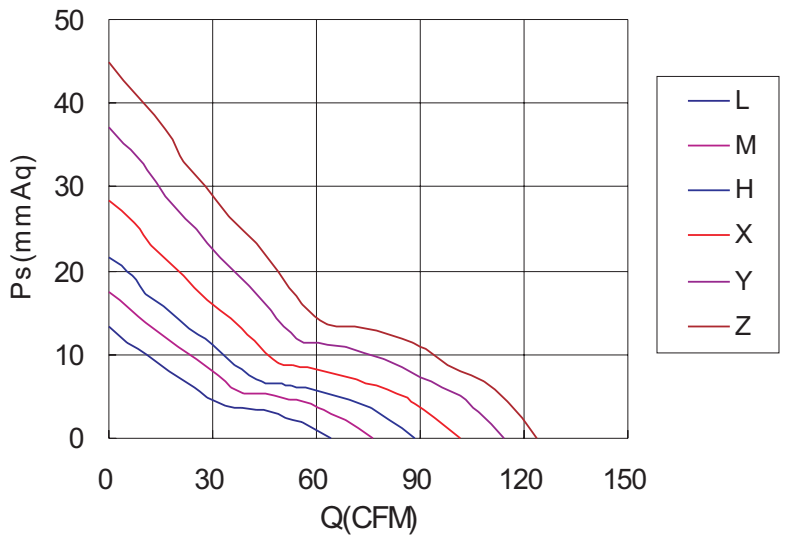

OUTLINE(mm)

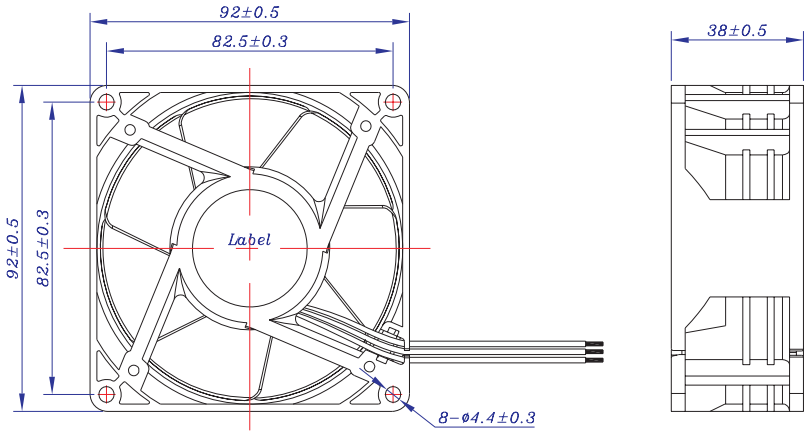

Note:

①-Reference standard: IEC 61000-4-2

②-Reference standard: UL 1446

Item No.	Operating Voltage	Maximum Air Flow		Maximum Air Pressure		Speed	Rated Current	Input Power	Noise	Weight
	(V)	(CMM)	(CFM)	(mmAq)	(inchAq)	(rpm)	(A)	(W)	dB(A)	(g)
MG(1)9212LB-(2)38	12	1.820	64.11	13.32	0.524	4,400	0.35	4.20	44.4	225
MG(1)9212MB-(2)38	12	2.160	76.30	17.50	0.689	5,200	0.50	6.00	48.3	225
MG(1)9212HB-(2)38	12	2.500	88.40	21.60	0.850	6,000	0.75	9.00	52.5	225
MG(1)9212XB-(2)38	12	2.870	101.38	28.50	1.122	6,900	1.00	12.00	56.1	225
MG(1)9212YB-(2)38	12	3.230	113.97	37.20	1.465	7,800	1.50	18.00	58.8	225
MG(1)9212ZB-(2)38	12	3.510	123.86	44.80	1.764	8,500	1.90	22.80	62.0	225
MG(1)9224LB-(2)38	24	1.820	64.11	13.32	0.524	4,400	0.18	4.32	44.4	225
MG(1)9224MB-(2)38	24	2.160	76.30	17.50	0.689	5,200	0.28	6.72	48.3	225
MG(1)9224HB-(2)38	24	2.500	88.40	21.60	0.850	6,000	0.40	9.60	52.5	225
MG(1)9224XB-(2)38	24	2.870	101.38	28.50	1.122	6,900	0.50	12.00	56.1	225
MG(1)9224YB-(2)38	24	3.230	113.97	37.20	1.465	7,800	0.70	16.80	58.8	225
MG(1)9224ZB-(2)38	24	3.510	123.86	44.80	1.764	8,500	1.00	24.00	62.0	225
MG(1)9248MB-(2)38	48	2.160	76.30	17.50	0.689	5,200	0.20	9.60	48.3	225
MG(1)9248HB-(2)38	48	2.500	88.40	21.60	0.850	6,000	0.28	13.44	52.5	225
MG(1)9248XB-(2)38	48	2.870	101.38	28.50	1.122	6,900	0.36	17.28	56.1	225
MG(1)9248YB-(2)38	48	3.230	113.97	37.20	1.465	7,800	0.54	25.92	58.8	225
MG(1)9248ZB-(2)38	48	3.510	123.86	44.80	1.764	8,500	0.65	31.20	62.0	225

Remarks:

(1)-Electric Characteristics:

A: Standard 2-Pin; **T**: Frequency Generation 3-Pin or more.

(2)-Function:

A: None Automatic Restart;
O: Automatic Restart & Locked Current Protection;
R: Rotate Detection Automatic Restart & Locked Current Protection;
S: Thermo-Control Speed, Automatic Restart & Locked Current Protection;
W: Pulse Width Modulation & Automatic Restart & Locked Current Protection (PWM).

The spec is for reference only, it's subject to change without any prior notice

120x120x25mm series A

Bearing Type	☑ 2 Ball	☐ Sleeve	☐ Rifle	☐ FDB
Speed Control	☑ Voltage	☑ Temperature	☑ PWM	
	☑ ±5% Speed tolerance		☑ ±10% Speed tolerance	
Frame Type	☐ 4 Screw	☑ 8 Screw		
Signal output	☑ Alarm Signal	☑ Tacho Signal		
Protection	☑ Lock	☑ Reverse	☐ Over Voltage	☐ Over heat
ESD ①	☐ Class Ⅰ	☑ Class Ⅱ	☑ Class Ⅲ	
Insulation ②	☑ Class A	☐ Class B	☐ Class C	☐ Class F
Safety	☑ UL	☑ TUV	☑ CE	☐ VDE
Motor type	☑ Uni-phase	☐ 2 phase	☐ 3 phase	

AIR FLOW/STATIC-PRESSURE

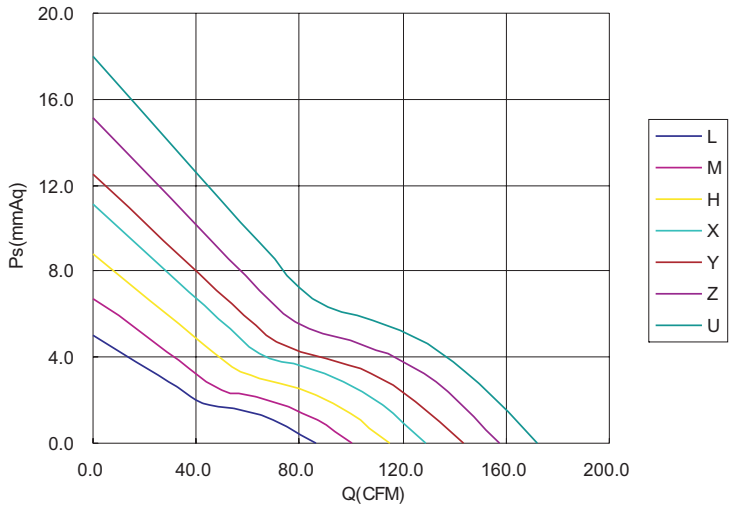

OUTLINE(mm)

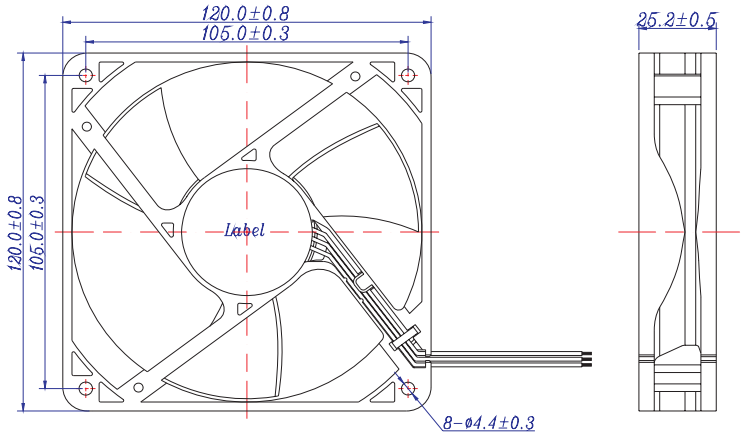

Note:

①-Reference standard: IEC 61000-4-2

②-Reference standard: UL 1446

Item No.	Operating Voltage	Maximum Air Flow		Maximum Air Pressure		Speed	Rated Current	Input Power	Noise	Weight
	(V)	(CMM)	(CFM)	(mmAq)	(inchAq)	(rpm)	(A)	(W)	dB(A)	(g)
MG(1)12012LB-(2)25	12	2.440	86.13	5.00	0.197	3,000	0.40	4.80	42.0	200
MG(1)12012MB-(2)25	12	2.840	100.25	6.70	0.264	3,500	0.50	6.00	46.0	200
MG(1)12012HB-(2)25	12	3.250	114.73	8.80	0.346	4,000	0.65	7.80	51.0	200
MG(1)12012XB-(2)25	12	3.660	129.20	11.14	0.438	4,500	0.90	10.80	55.0	200
MG(1)12012YB-(2)25	12	4.060	143.32	12.50	0.492	5,000	1.20	14.40	58.0	200
MG(1)12012ZB-(2)25	12	4.466	157.65	15.13	0.596	5,500	1.60	19.20	61.0	200
MG(1)12012UB-(2)25	12	4.872	171.98	18.00	0.709	6,000	2.00	24.00	64.0	200
MG(1)12024LB-(2)25	24	2.440	86.13	5.00	0.197	3,000	0.20	4.80	42.0	200
MG(1)12024MB-(2)25	24	2.840	100.25	6.70	0.264	3,500	0.25	6.00	46.0	200
MG(1)12024HB-(2)25	24	3.250	114.73	8.80	0.346	4,000	0.35	8.40	51.0	200
MG(1)12024XB-(2)25	24	3.660	129.20	11.14	0.438	4,500	0.45	10.80	55.0	200
MG(1)12024YB-(2)25	24	4.060	143.32	12.50	0.492	5,000	0.60	14.40	58.0	200
MG(1)12024ZB-(2)25	24	4.466	157.65	15.13	0.596	5,500	0.80	19.20	61.0	200
MG(1)12024UB-(2)25	24	4.872	171.98	18.00	0.709	6,000	1.00	24.00	64.0	200
MG(1)12048LB-(2)25	48	2.440	86.13	5.00	0.197	3,000	0.10	4.80	42.0	200
MG(1)12048MB-(2)25	48	2.840	100.25	6.70	0.264	3,500	0.15	7.20	46.0	200
MG(1)12048HB-(2)25	48	3.250	114.73	8.80	0.346	4,000	0.20	9.60	51.0	200
MG(1)12048XB-(2)25	48	3.660	129.20	11.14	0.438	4,500	0.25	12.00	55.0	200
MG(1)12048YB-(2)25	48	4.060	143.32	12.50	0.492	5,000	0.30	14.40	58.0	200
MG(1)12048ZB-(2)25	48	4.466	157.65	15.13	0.596	5,500	0.40	19.20	61.0	200
MG(1)12048UB-(2)25	48	4.872	171.98	18.00	0.709	6,000	0.50	24.00	64.0	200

Remarks:

(1)-Electric Characteristics:

A: Standard 2-Pin; **T**: Frequency Generation 3-Pin or more.

(2)-Function:

O: Automatic Restart & Locked Current Protection;

R: Rotate Detection Automatic Restart & Locked Current Protection;

S: Thermo-Control Speed, Automatic Restart & Locked Current Protection;

W: Pulse Width Modulation & Automatic Restart & Locked Current Protection (PWM).

The spec is for reference only, it's subject to change without any prior notice

120x120x25mm series F

Bearing Type	☑ 2 Ball	☐ Sleeve	☐ Rifle	☐ FDB
Speed Control	☑ Voltage	☐ Temperature	☑ PWM	
	☑ ±5% Speed tolerance		☑ ±10% Speed tolerance	
Frame Type	☐ 4 Screw	☑ 8 Screw		
Signal output	☑ Alarm Signal	☑ Tacho Signal		
Protection	☑ Lock	☑ Reverse	☐ Over Voltage	☐ Over heat
ESD ①	☐ Class Ⅰ	☑ Class Ⅱ	☑ Class Ⅲ	
Insulation ②	☑ Class A	☐ Class B	☐ Class C	☐ Class F
Safety	☑ UL	☑ TUV	☑ CE	☐ VDE
Motor type	☑ Uni-phase	☐ 2 phase	☐ 3 phase	

AIR FLOW/STATIC-PRESSURE

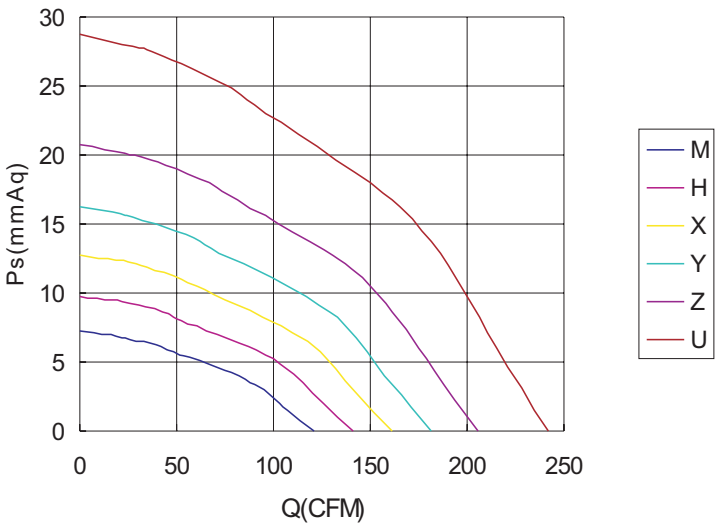

OUTLINE(mm)

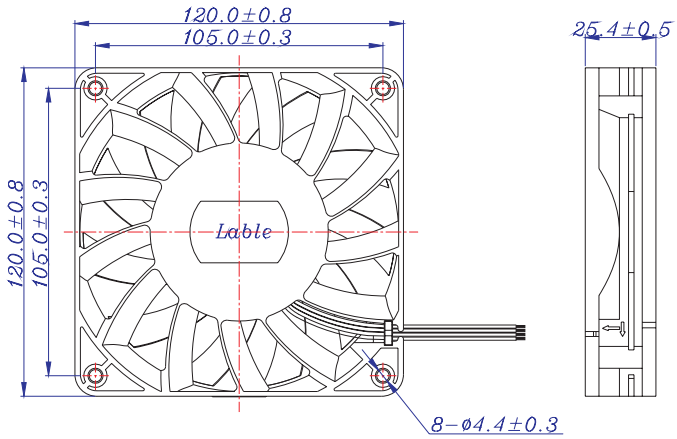

Note:

①-Reference standard: IEC 61000-4-2

②-Reference standard: UL 1446

Item No.	Operating Voltage	Maximum Air Flow		Maximum Air Pressure		Speed	Rated Current	Input Power	Noise	Weight
	(V)	(CMM)	(CFM)	(mmAq)	(inchAq)	(rpm)	(A)	(W)	dB(A)	(g)
MG(1)12048MB-(2)25	48	3.431	121.11	7.20	0.283	3,000	0.20	9.60	51.5	260
MG(1)12048HB-(2)25	48	4.003	141.30	9.80	0.386	3,500	0.25	12.00	55.0	260
MG(1)12048XB-(2)25	48	4.571	161.50	12.80	0.504	4,000	0.35	16.80	58.1	260
MG(1)12048YB-(2)25	48	5.147	181.69	16.20	0.638	4,500	0.50	24.00	60.3	260
MG(1)12048ZB-(2)25	48	5.832	205.90	20.80	0.818	5,100	0.90	43.20	63.8	260
MG(1)12048UB-(2)25	48	6.864	242.31	28.80	1.134	6,000	1.50	72.00	68.4	260

Remarks:

(1)-Electric Characteristics:

A: Standard 2-Pin; **T**: Frequency Generation 3-Pin or more.

(2)-Function:

O: Automatic Restart & Locked Current Protection;

R: Rotate Detection Automatic Restart & Locked Current Protection;

S: Thermo-Control Speed, Automatic Restart & Locked Current Protection;

W: Pulse Width Modulation & Automatic Restart & Locked Current Protection (PWM).

The spec is for reference only, it's subject to change without any prior notice

120x120x25mm series G

Bearing Type	☑ 2 Ball	☐ Sleeve	☑ Rifle	☑ FDB
Speed Control	☑ Voltage	☑ Temperature	☑ PWM	
	☑ ±5% Speed tolerance		☑ ±10% Speed tolerance	
Frame Type	☐ 4 Screw	☑ 8 Screw		
Signal output	☑ Alarm Signal	☑ Tacho Signal		
Protection	☑ Lock	☑ Reverse	☐ Over Voltage	☐ Over heat
ESD ①	☐ Class Ⅰ	☑ Class Ⅱ	☑ Class Ⅲ	
Insulation ②	☑ Class A	☐ Class B	☐ Class C	☐ Class F
Safety	☑ UL	☑ TUV	☑ CE	☐ VDE
Motor type	☑ Uni-phase	☑ 2 phase	☐ 3 phase	

AIR FLOW/STATIC-PRESSURE

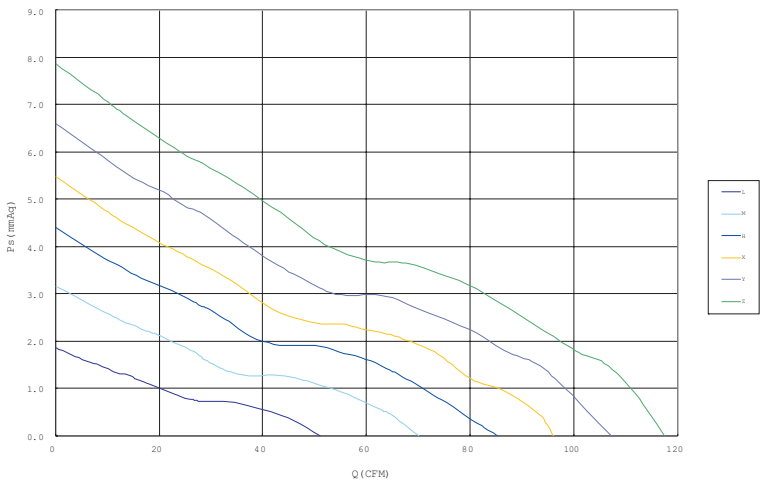

OUTLINE(mm)

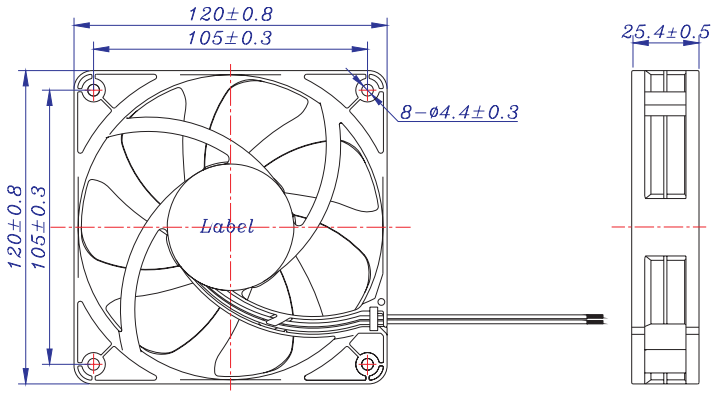

Note:

①-Reference standard: IEC 61000-4-2

②-Reference standard: UL 1446

Item No.	Operating Voltage	Maximum Air Flow		Maximum Air Pressure		Speed	Rated Current	Input Power	Noise	Weight
	(V)	(CMM)	(CFM)	(mmAq)	(inchAq)	(rpm)	(A)	(W)	dB(A)	(g)
MG(1)12005YB-(2)25	5	3.045	107.50	6.64	0.261	3,000	1.63	8.15	43.9	154
MG(1)12005YF-(2)25	5	3.045	107.50	6.64	0.261	3,000	1.63	8.15	43.1	154
MG(1)12005YR-(2)25	5	3.045	107.50	6.64	0.261	3,000	1.63	8.15	43.1	154
MG(1)12012LB-(2)25	12	1.459	51.50	1.87	0.074	1,500	0.30	3.60	25.1	154
MG(1)12012MB-(2)25	12	1.986	70.10	3.10	0.122	2,000	0.38	4.56	32.8	154
MG(1)12012HB-(2)25	12	2.402	84.80	4.20	0.165	2,400	0.45	5.40	37.7	154
MG(1)12012XB-(2)25	12	2.725	96.20	5.50	0.217	2,700	0.52	6.24	40.9	154
MG(1)12012YB-(2)25	12	3.045	107.50	6.64	0.261	3,000	0.68	8.16	43.9	154
MG(1)12012ZB-(2)25	12	3.337	117.80	7.90	0.311	3,300	0.90	10.80	46.5	154
MG(1)12012LF-(2)25	12	1.459	51.50	1.87	0.074	1,500	0.30	3.60	24.3	154
MG(1)12012MF-(2)25	12	1.986	70.10	3.10	0.122	2,000	0.38	4.56	32.2	154
MG(1)12012HF-(2)25	12	2.402	84.80	4.20	0.165	2,400	0.45	5.40	37.0	154
MG(1)12012XF-(2)25	12	2.725	96.20	5.50	0.217	2,700	0.52	6.24	40.3	154
MG(1)12012YF-(2)25	12	3.045	107.50	6.64	0.261	3,000	0.68	8.16	43.1	154
MG(1)12012ZF-(2)25	12	3.337	117.80	7.90	0.311	3,300	0.90	10.80	45.4	154
MG(1)12012LR-(2)25	12	1.459	51.50	1.87	0.074	1,500	0.30	3.60	24.8	154
MG(1)12012MR-(2)25	12	1.986	70.10	3.10	0.122	2,000	0.38	4.56	32.6	154
MG(1)12012HR-(2)25	12	2.402	84.80	4.20	0.165	2,400	0.45	5.40	37.4	154
MG(1)12012XR-(2)25	12	2.725	96.20	5.50	0.217	2,700	0.52	6.24	40.6	154
MG(1)12012YR-(2)25	12	3.045	107.50	6.64	0.261	3,000	0.68	8.16	43.4	154
MG(1)12012ZR-(2)25	12	3.337	117.80	7.90	0.311	3,300	0.90	10.80	45.9	154

Remarks:

(1)-Electric Characteristics:

A: Standard 2-Pin; **T**: Frequency Generation 3-Pin or more.

(2)-Function:

A: None Automatic Restart;
O: Automatic Restart & Locked Current Protection;
R: Rotate Detection Automatic Restart & Locked Current Protection;
S: Thermo-Control Speed, Automatic Restart & Locked Current Protection;
W: Pulse Width Modulation & Automatic Restart & Locked Current Protection (PWM).

The spec is for reference only, it's subject to change without any prior notice

120x120x25mm series G

Bearing Type	☑ 2 Ball	☐ Sleeve	☑ Rifle	☑ FDB
Speed Control	☑ Voltage	☑ Temperature	☑ PWM	
	☑ ±5% Speed tolerance		☑ ±10% Speed tolerance	
Frame Type	☐ 4 Screw	☑ 8 Screw		
Signal output	☑ Alarm Signal	☑ Tacho Signal		
Protection	☑ Lock	☑ Reverse	☐ Over Voltage	☐ Over heat
ESD ①	☐ Class Ⅰ	☑ Class Ⅱ	☑ Class Ⅲ	
Insulation ②	☑ Class A	☐ Class B	☐ Class C	☐ Class F
Safety	☑ UL	☑ TUV	☑ CE	☐ VDE
Motor type	☑ Uni-phase	☑ 2 phase	☐ 3 phase	

AIR FLOW/STATIC-PRESSURE

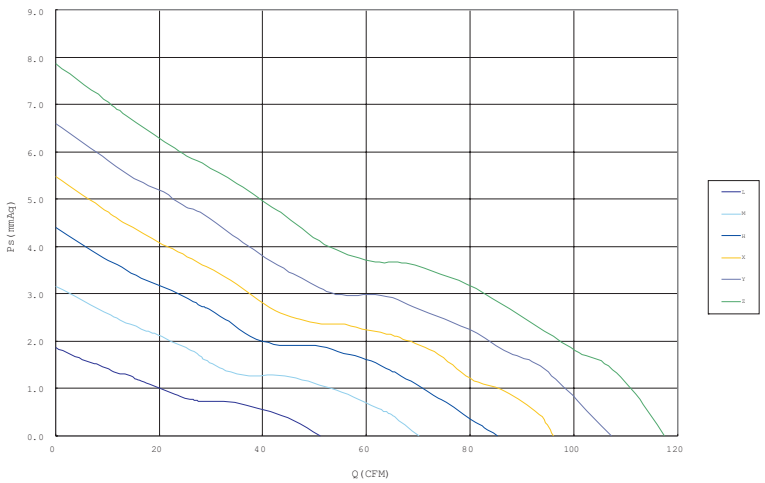

OUTLINE(mm)

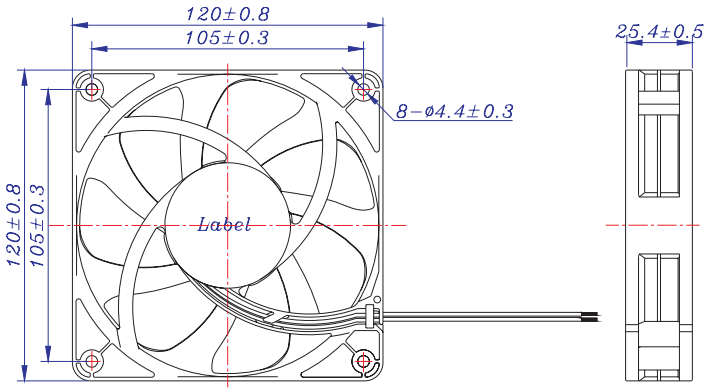

Note:

①-Reference standard: IEC 61000-4-2

②-Reference standard: UL 1446

Item No.	Operating Voltage	Maximum Air Flow		Maximum Air Pressure		Speed	Rated Current	Input Power	Noise	Weight
	(V)	(CMM)	(CFM)	(mmAq)	(inchAq)	(rpm)	(A)	(W)	dB(A)	(g)
MG(1)12024LB-(2)25	24	1.459	51.50	1.87	0.074	1,500	0.18	4.32	25.1	154
MG(1)12024MB-(2)25	24	1.986	70.10	3.10	0.122	2,000	0.23	5.52	32.8	154
MG(1)12024HB-(2)25	24	2.402	84.80	4.20	0.165	2,400	0.30	7.20	37.7	154
MG(1)12024XB-(2)25	24	2.725	96.20	5.50	0.217	2,700	0.42	10.08	40.9	154
MG(1)12024YB-(2)25	24	3.045	107.50	6.64	0.261	3,000	0.48	11.52	43.9	154
MG(1)12024ZB-(2)25	24	3.337	117.80	7.90	0.311	3,300	0.60	14.40	46.5	154
MG(1)12024LF-(2)25	24	1.459	51.50	1.87	0.074	1,500	0.18	4.32	24.3	154
MG(1)12024MF-(2)25	24	1.986	70.10	3.10	0.122	2,000	0.23	5.52	32.2	154
MG(1)12024HF-(2)25	24	2.402	84.80	4.20	0.165	2,400	0.30	7.20	37.0	154
MG(1)12024XF-(2)25	24	2.725	96.20	5.50	0.217	2,700	0.42	10.08	40.3	154
MG(1)12024YF-(2)25	24	3.045	107.50	6.64	0.261	3,000	0.48	11.52	43.1	154
MG(1)12024ZF-(2)25	24	3.337	117.80	7.90	0.311	3,300	0.60	14.40	45.4	154
MG(1)12024LR-(2)25	24	1.459	51.50	1.87	0.074	1,500	0.18	4.32	24.8	154
MG(1)12024MR-(2)25	24	1.986	70.10	3.10	0.122	2,000	0.23	5.52	32.6	154
MG(1)12024HR-(2)25	24	2.402	84.80	4.20	0.165	2,400	0.30	7.20	37.4	154
MG(1)12024XR-(2)25	24	2.725	96.20	5.50	0.217	2,700	0.42	10.08	40.6	154
MG(1)12024YR-(2)25	24	3.045	107.50	6.64	0.261	3,000	0.48	11.52	43.4	154
MG(1)12024ZR-(2)25	24	3.337	117.80	7.90	0.311	3,300	0.60	14.40	45.9	154
MG(1)12048HB-(2)25	48	2.402	84.80	4.20	0.165	2,400	0.12	5.76	37.7	154
MG(1)12048XB-(2)25	48	2.725	96.20	5.50	0.217	2,700	0.18	8.64	40.9	154
MG(1)12048YB-(2)25	48	3.045	107.50	6.64	0.261	3,000	0.25	12.00	43.9	154
MG(1)12048HF-(2)25	48	2.402	84.80	4.20	0.165	2,400	0.12	5.76	37.0	154
MG(1)12048XF-(2)25	48	2.725	96.20	5.50	0.217	2,700	0.18	8.64	40.3	154
MG(1)12048YF-(2)25	48	3.045	107.50	6.64	0.261	3,000	0.25	12.00	43.1	154
MG(1)12048HR-(2)25	48	2.402	84.80	4.20	0.165	2,400	0.12	5.76	37.4	154
MG(1)12048XR-(2)25	48	2.725	96.20	5.50	0.217	2,700	0.18	8.64	40.6	154
MG(1)12048YR-(2)25	48	3.045	107.50	6.64	0.261	3,000	0.25	12.00	43.4	154

Remarks:

(1)-Electric Characteristics:

A: Standard 2-Pin; **T**: Frequency Generation 3-Pin or more.

(2)-Function:

A: None Automatic Restart;
O: Automatic Restart & Locked Current Protection;
R: Rotate Detection Automatic Restart & Locked Current Protection;
S: Thermo-Control Speed, Automatic Restart & Locked Current Protection;
W: Pulse Width Modulation & Automatic Restart & Locked Current Protection (PWM).

The spec is for reference only, it's subject to change without any prior notice

120x120x32mm series

Bearing Type	☑ 2 Ball	☐ Sleeve	☐ Rifle	☐ FDB
Speed Control	☑ Voltage	☐ Temperature	☑ PWM	
	☑ ±5% Speed tolerance		☑ ±10% Speed tolerance	
Frame Type	☐ 4 Screw	☑ 8 Screw		
Signal output	☑ Alarm Signal	☑ Tacho Signal		
Protection	☑ Lock	☑ Reverse	☐ Over Voltage	☐ Over heat
ESD ①	☐ Class Ⅰ	☐ Class Ⅱ	☑ Class Ⅲ	
Insulation ②	☑ Class A	☐ Class B	☐ Class C	☐ Class F
Safety	☑ UL	☑ TUV	☑ CE	☐ VDE
Motor type	☑ Uni-phase	☐ 2 phase	☐ 3 phase	

AIR FLOW/STATIC-PRESSURE

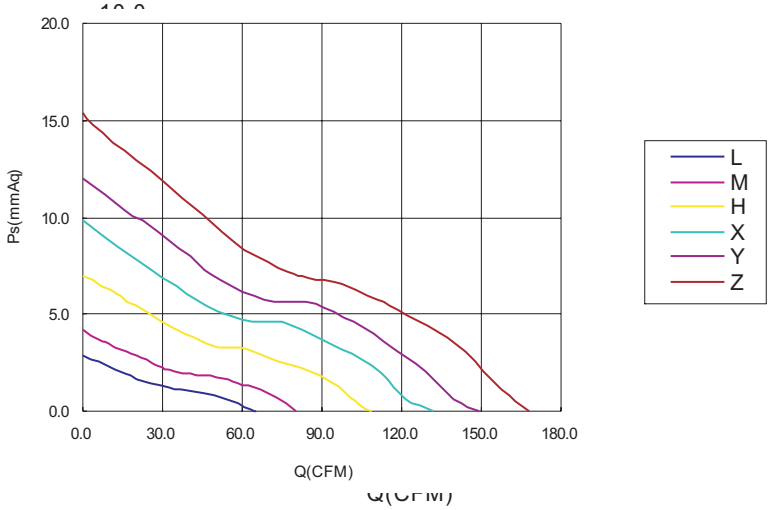

OUTLINE(mm)

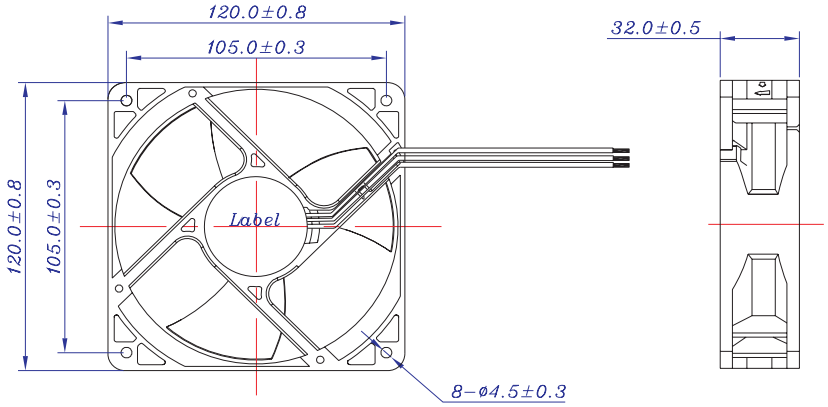

Note:

①-Reference standard: IEC 61000-4-2

②-Reference standard: UL 1446

Item No.	Operating Voltage	Maximum Air Flow		Maximum Air Pressure		Speed	Rated Current	Input Power	Noise	Weight
	(V)	(CMM)	(CFM)	(mmAq)	(inchAq)	(rpm)	(A)	(W)	dB(A)	(g)
MGT12012LB-(2)32	12	1.864	65.80	2.83	0.111	1,900	0.20	2.40	31.1	250
MGT12012MB-(2)32	12	2.453	86.58	4.88	0.192	2,500	0.32	3.84	39.2	250
MGT12012HB-(2)32	12	3.273	115.54	7.40	0.291	3,200	0.45	5.40	47.2	250
MGT12012XB-(2)32	12	3.921	138.42	10.98	0.432	3,800	0.65	7.80	52.2	250
MGT12012YB-(2)32	12	4.176	147.43	12.23	0.481	4,400	1.00	12.00	56.7	250
MGT12012ZB-(2)32	12	4.808	169.74	16.00	0.630	5,000	1.40	16.80	60.6	250
MGT12024LB-(2)32	24	1.864	65.80	2.83	0.111	1,900	0.15	3.60	31.1	250
MGT12024MB-(2)32	24	2.453	86.58	4.88	0.192	2,500	0.23	5.52	39.2	250
MGT12024HB-(2)32	24	3.273	115.54	7.40	0.291	3,200	0.31	7.44	47.2	250
MGT12024XB-(2)32	24	3.921	138.42	10.98	0.432	3,800	0.42	11.28	52.2	250
MGT12024YB-(2)32	24	4.176	147.43	12.23	0.481	4,400	0.52	13.44	56.7	250
MGT12024ZB-(2)32	24	4.808	169.74	16.00	0.630	5,000	0.68	16.32	60.6	250
MGT12048LB-(2)32	48	1.864	65.80	2.83	0.111	1,900	0.07	3.84	31.1	250
MGT12048MB-(2)32	48	2.453	86.58	4.88	0.192	2,500	0.11	5.28	39.2	250
MGT12048HB-(2)32	48	3.273	115.54	7.40	0.291	3,200	0.14	7.20	47.2	250
MGT12048XB-(2)32	48	3.921	138.42	10.98	0.432	3,800	0.19	9.60	52.2	250
MGT12048YB-(2)32	48	4.176	147.43	12.23	0.481	4,400	0.22	11.52	56.7	250
MGT12048ZB-(2)32	48	4.808	169.74	16.00	0.630	5,000	0.38	16.32	60.6	250

Remarks:

(1)-Electric Characteristics:

A: Standard 2-Pin; **T**: Frequency Generation 3-Pin or more.

(2)-Function:

A: None Automatic Restart;
O: Automatic Restart & Locked Current Protection;
R: Rotate Detection Automatic Restart & Locked Current Protection;
S: Thermo-Control Speed, Automatic Restart & Locked Current Protection;
W: Pulse Width Modulation & Automatic Restart & Locked Current Protection (PWM).

The spec is for reference only, it's subject to change without any prior notice

120x120x38mm series A

Bearing Type	☑ 2 Ball	☐ Sleeve	☐ Rifle	☐ FDB
Speed Control	☑ Voltage	☑ Temperature	☑ PWM	
	☑ ±5% Speed tolerance		☑ ±10% Speed tolerance	
Frame Type	☐ 4 Screw	☑ 8 Screw		
Signal output	☑ Alarm Signal	☑ Tacho Signal		
Protection	☑ Lock	☑ Reverse	☐ Over Voltage	☐ Over heat
ESD ①	☐ Class Ⅰ	☑ Class Ⅱ	☑ Class Ⅲ	
Insulation ②	☑ Class A	☐ Class B	☐ Class C	☐ Class F
Safety	☑ UL	☑ TUV	☑ CE	☐ VDE
Motor type	☑ Uni-phase	☑ 2 phase	☐ 3 phase	

AIR FLOW/STATIC-PRESSURE

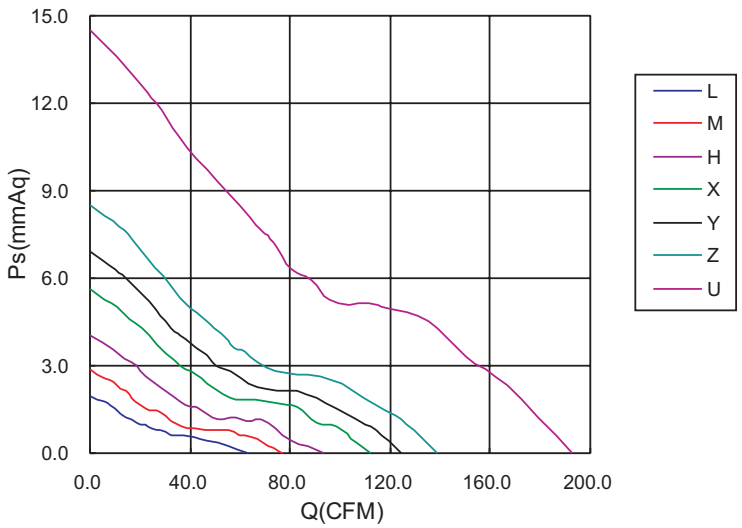

OUTLINE(mm)

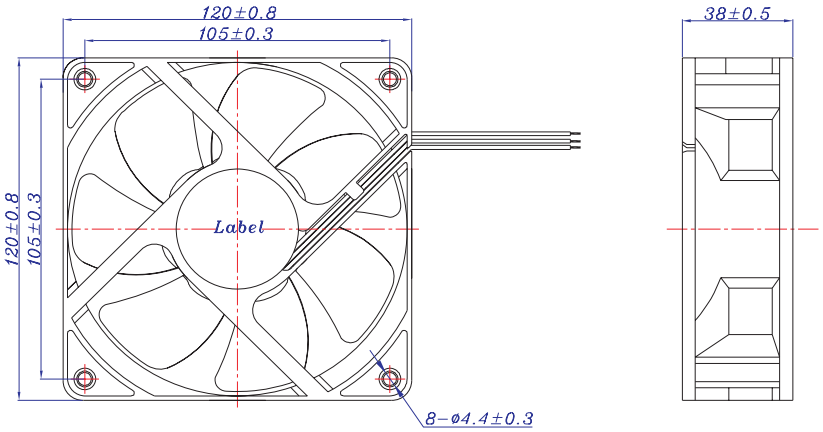

Note:

①-Reference standard: IEC 61000-4-2

②-Reference standard: UL 1446

Item No.	Operating Voltage	Maximum Air Flow		Maximum Air Pressure		Speed	Rated Current	Input Power	Noise	Weight
	(V)	(CMM)	(CFM)	(mmAq)	(inchAq)	(rpm)	(A)	(W)	dB(A)	(g)
MG(1)12012LB-(2)38	12	1.796	63.40	1.95	0.077	1,400	0.20	2.40	27.6	300
MG(1)12012MB-(2)38	12	2.190	77.33	2.85	0.112	1,700	0.28	3.36	32.9	300
MG(1)12012HB-(2)38	12	2.645	93.39	4.05	0.159	2,000	0.42	5.04	36.5	300
MG(1)12012XB-(2)38	12	3.183	112.40	5.61	0.221	2,400	0.60	7.20	41.4	300
MG(1)12012YB-(2)38	12	3.532	124.70	6.92	0.272	2,700	0.80	9.60	44.8	300
MG(1)12012UB-(2)38	12	5.463	192.90	14.50	0.571	4,000	2.20	26.40	57.0	300
MG(1)12024LB-(2)38	24	1.796	63.40	1.95	0.077	1,400	0.13	3.12	27.6	300
MG(1)12024MB-(2)38	24	2.190	77.33	2.85	0.112	1,700	0.16	3.84	32.9	300
MG(1)12024HB-(2)38	24	2.645	93.39	4.05	0.159	2,000	0.24	5.76	36.5	300
MG(1)12024XB-(2)38	24	3.183	112.40	5.61	0.221	2,400	0.34	8.16	41.4	300
MG(1)12024YB-(2)38	24	3.532	124.70	6.92	0.272	2,700	0.46	11.04	44.8	300
MG(1)12024ZB-(2)38	24	3.924	138.56	8.54	0.336	3,000	0.54	12.96	46.8	300
MG(1)12024UB-(2)38	24	5.463	192.90	14.50	0.571	4,000	1.30	31.20	57.0	300
MG(1)12048LB-(2)38	48	1.796	63.40	1.95	0.077	1,400	0.13	6.24	27.6	300
MG(1)12048MB-(2)38	48	2.190	77.33	2.85	0.112	1,700	0.17	8.16	32.9	300
MG(1)12048HB-(2)38	48	2.645	93.39	4.05	0.159	2,000	0.20	9.60	36.5	300
MG(1)12048XB-(2)38	48	3.183	112.40	5.61	0.221	2,400	0.27	12.96	41.4	300
MG(1)12048YB-(2)38	48	3.532	124.70	6.92	0.272	2,700	0.32	15.36	44.8	300
MG(1)12048ZB-(2)38	48	3.924	138.56	8.54	0.336	3,000	0.39	18.72	46.8	300
MG(1)12048UB-(2)38	48	5.463	192.90	14.50	0.571	4,000	0.60	28.80	57.0	300

Remarks:

(1)-Electric Characteristics:

A: Standard 2-Pin; **T**: Frequency Generation 3-Pin or more.

(2)-Function:

A: None Automatic Restart;
O: Automatic Restart & Locked Current Protection;
R: Rotate Detection Automatic Restart & Locked Current Protection;
S: Thermo-Control Speed, Automatic Restart & Locked Current Protection;
W: Pulse Width Modulation & Automatic Restart & Locked Current Protection (PWM).

The spec is for reference only, it's subject to change without any prior notice

120x120x38mm series F

Bearing Type	☑ 2 Ball	☐ Sleeve	☐ Rifle	☐ FDB
Speed Control	☑ Voltage	☐ Temperature	☑ PWM	
	☑ ±5% Speed tolerance		☑ ±10% Speed tolerance	
Frame Type	☐ 4 Screw	☑ 8 Screw		
Signal output	☑ Alarm Signal	☑ Tacho Signal		
Protection	☑ Lock	☑ Reverse	☐ Over Voltage	☐ Over heat
ESD ①	☐ Class Ⅰ	☐ Class Ⅱ	☑ Class Ⅲ	
Insulation ②	☑ Class A	☐ Class B	☐ Class C	☐ Class F
Safety	☑ UL	☑ TUV	☑ CE	☐ VDE
Motor type	☑ Uni-phase	☐ 2 phase	☐ 3 phase	

AIR FLOW/STATIC-PRESSURE

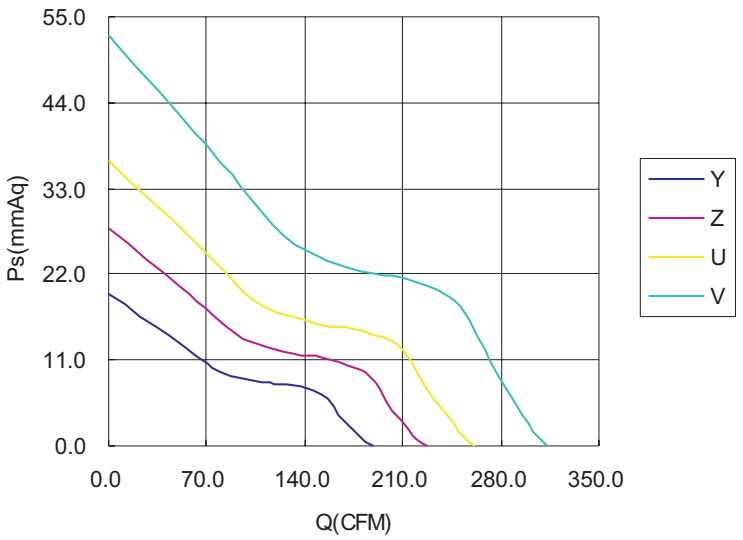

OUTLINE(mm)

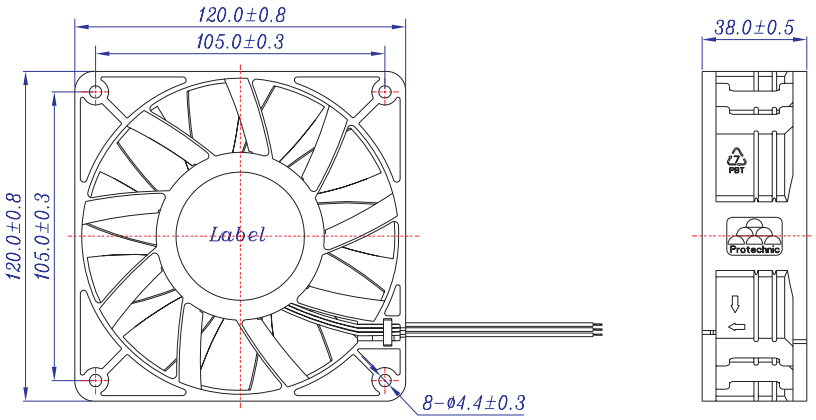

Note:

①-Reference standard: IEC 61000-4-2

②-Reference standard: UL 1446

Item No.	Operating Voltage	Maximum Air Flow		Maximum Air Pressure		Speed	Rated Current	Input Power	Noise	Weight
	(V)	(CMM)	(CFM)	(mmAq)	(inchAq)	(rpm)	(A)	(W)	dB(A)	(g)
MG(1)12012YB-(2)38	12	5.368	189.63	19.36	0.762	4,000	1.92	23.04	59.0	380
MG(1)12012ZB-(2)38	12	6.442	227.55	27.88	1.097	4,800	3.24	38.88	64.5	380
MG(1)12024YB-(2)38	24	5.368	189.63	19.36	0.762	4,000	1.08	25.92	59.0	380
MG(1)12024ZB-(2)38	24	6.442	227.55	27.88	1.097	4,800	1.62	38.88	64.5	380
MG(1)12024UB-(2)38	24	7.382	260.74	36.60	1.441	5,500	2.40	57.60	69.0	380
MG(1)12048YB-(2)38	48	5.368	189.63	19.36	0.762	4,000	0.54	25.92	59.0	380
MG(1)12048ZB-(2)38	48	6.442	227.55	27.88	1.097	4,800	0.82	39.36	64.5	380
MG(1)12048UB-(2)38	48	7.382	260.74	36.60	1.441	5,500	1.20	57.60	69.0	380
MG(1)12048VB-(2)38	48	8.858	312.89	52.70	2.075	6,600	1.80	86.40	74.0	380

Remarks:

(1)-Electric Characteristics:

A: Standard 2-Pin; **T**: Frequency Generation 3-Pin or more.

(2)-Function:

O: Automatic Restart & Locked Current Protection;

R: Rotate Detection Automatic Restart & Locked Current Protection;

S: Thermo-Control Speed, Automatic Restart & Locked Current Protection;

W: Pulse Width Modulation & Automatic Restart & Locked Current Protection (PWM).

The spec is for reference only, it's subject to change without any prior notice

120x120x38mm series G

Bearing Type	☑ 2 Ball	☐ Sleeve	☐ Rifle	☐ FDB
Speed Control	☑ Voltage	☑ Temperature	☑ PWM	
	☑ ±5% Speed tolerance		☑ ±10% Speed tolerance	
Frame Type	☐ 4 Screw	☑ 8 Screw		
Signal output	☑ Alarm Signal	☑ Tacho Signal		
Protection	☑ Lock	☑ Reverse	☐ Over Voltage	☐ Over heat
ESD ①	☐ Class Ⅰ	☑ Class Ⅱ	☑ Class Ⅲ	
Insulation ②	☑ Class A	☐ Class B	☐ Class C	☐ Class F
Safety	☑ UL	☑ TUV	☑ CE	☐ VDE
Motor type	☑ Uni-phase	☑ 2 phase	☐ 3 phase	

AIR FLOW/STATIC-PRESSURE

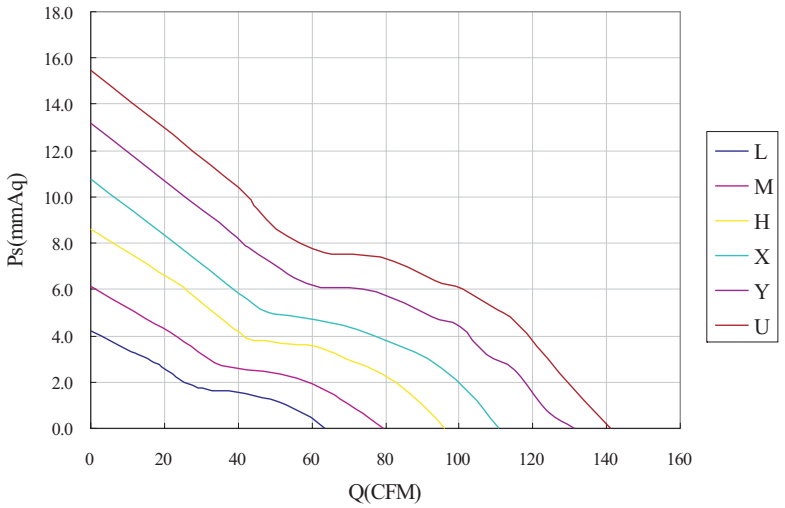

OUTLINE(mm)

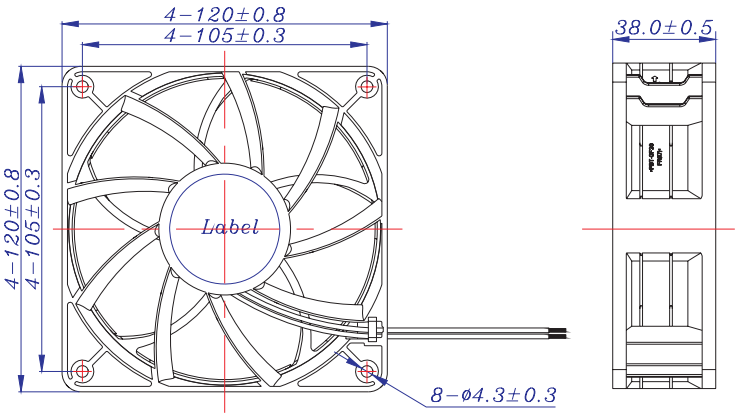

Note:

①-Reference standard: IEC 61000-4-2

②-Reference standard: UL 1446

Item No.	Operating Voltage	Maximum Air Flow		Maximum Air Pressure		Speed	Rated Current	Input Power	Noise	Weight
	(V)	(CMM)	(CFM)	(mmAq)	(inchAq)	(rpm)	(A)	(W)	dB(A)	(g)
MG(1)12012LB-(2)38	12	1.805	63.70	4.24	0.167	2,000	0.20	2.40	32.7	251
MG(1)12012MB-(2)38	12	2.252	79.50	6.16	0.242	2,500	0.28	3.36	37.5	251
MG(1)12012HB-(2)38	12	2.716	95.90	8.62	0.339	3,000	0.42	5.04	42.1	251
MG(1)12012XB-(2)38	12	3.136	110.70	10.80	0.425	3,500	0.60	7.20	46.5	251
MG(1)12012YB-(2)38	12	3.713	131.10	13.20	0.519	4,000	0.80	9.60	49.8	251
MG(1)12012UB-(2)38	12	4.002	141.30	15.50	0.610	4,500	2.20	26.40	53.3	251
MG(1)12024LB-(2)38	24	1.805	63.70	4.24	0.167	2,000	0.13	3.12	32.7	251
MG(1)12024MB-(2)38	24	2.252	79.50	6.16	0.242	2,500	0.16	3.84	37.5	251
MG(1)12024HB-(2)38	24	2.716	95.90	8.62	0.339	3,000	0.24	5.76	42.1	251
MG(1)12024XB-(2)38	24	3.136	110.70	10.80	0.425	3,500	0.34	8.16	46.5	251
MG(1)12024YB-(2)38	24	3.713	131.10	13.20	0.519	4,000	0.46	11.04	49.8	251
MG(1)12024UB-(2)38	24	4.002	141.30	15.50	0.610	4,500	1.30	31.20	53.3	251
MG(1)12048LB-(2)38	48	1.805	63.70	4.24	0.167	2,000	0.13	6.24	32.7	251
MG(1)12048MB-(2)38	48	2.252	79.50	6.16	0.242	2,500	0.17	8.16	37.5	251
MG(1)12048HB-(2)38	48	2.716	95.90	8.62	0.339	3,000	0.20	9.60	42.1	251
MG(1)12048XB-(2)38	48	3.136	110.70	10.80	0.425	3,500	0.27	12.96	46.5	251
MG(1)12048YB-(2)38	48	3.713	131.10	13.20	0.519	4,000	0.32	15.36	49.8	251
MG(1)12048UB-(2)38	48	4.002	141.30	15.50	0.610	4,500	0.60	28.80	53.3	251

Remarks:

(1)-Electric Characteristics:

A: Standard 2-Pin; **T**: Frequency Generation 3-Pin or more.

(2)-Function:

A: None Automatic Restart;

O: Automatic Restart & Locked Current Protection;

R: Rotate Detection Automatic Restart & Locked Current Protection;

W: Pulse Width Modulation & Automatic Restart & Locked Current Protection (PWM).

The spec is for reference only, it's subject to change without any prior notice

135x135x25mm series B

Bearing Type	☑ 2 Ball	☐ Sleeve	☑ Rifle	☑ FDB
Speed Control	☑ Voltage	☑ Temperature	☑ PWM	
	☑ ±5% Speed tolerance		☑ ±10% Speed tolerance	
Frame Type	☐ 4 Screw	☑ 8 Screw		
Signal output	☑ Alarm Signal	☑ Tacho Signal		
Protection	☑ Lock	☑ Reverse	☐ Over Voltage	☐ Over heat
ESD ①	☐ Class Ⅰ	☑ Class Ⅱ	☑ Class Ⅲ	
Insulation ②	☑ Class A	☐ Class B	☐ Class C	☐ Class F
Safety	☑ UL	☑ TUV	☑ CE	☐ VDE
Motor type	☑ Uni-phase	☑ 2 phase	☐ 3 phase	

AIR FLOW/STATIC-PRESSURE

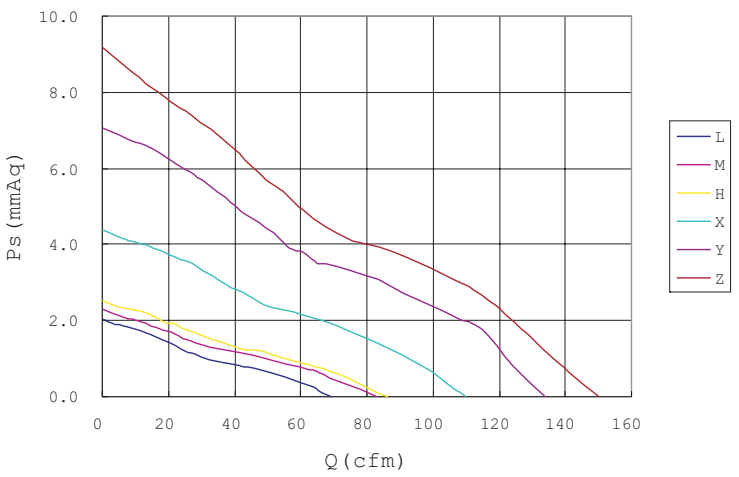

OUTLINE(mm)

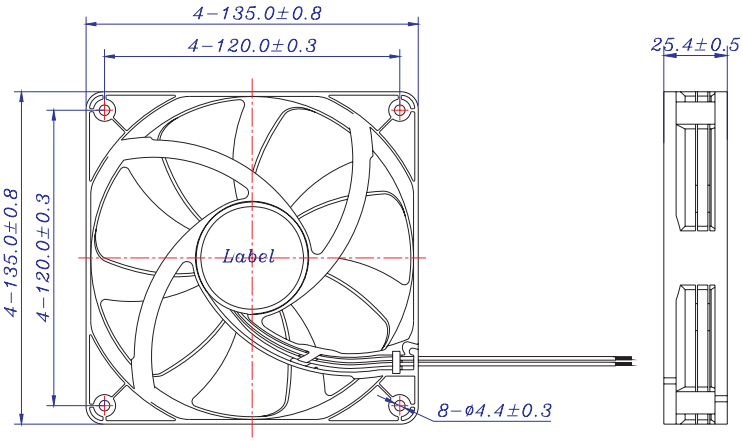

Note:

①-Reference standard: IEC 61000-4-2

②-Reference standard: UL 1446

Item No.	Operating Voltage	Maximum Air Flow		Maximum Air Pressure		Speed	Rated Current	Input Power	Noise	Weight
	(V)	(CMM)	(CFM)	(mmAq)	(inchAq)	(rpm)	(A)	(W)	dB(A)	(g)
MG(1)13512LR-(2)25	12	2.080	73.43	2.40	0.094	1,500	0.22	2.64	28.0	184
MG(1)13512MR-(2)25	12	2.380	84.03	3.11	0.122	1,700	0.25	3.00	32.2	184
MG(1)13512HR-(2)25	12	2.549	89.99	3.44	0.135	1,800	0.28	3.36	33.9	184
MG(1)13512XR-(2)25	12	3.280	115.80	5.28	0.208	2,300	0.38	4.56	41.1	184
MG(1)13512YR-(2)25	12	3.941	139.10	7.16	0.282	2,800	0.50	6.00	46.7	184
MG(1)13512ZR-(2)25	12	4.377	154.50	8.48	0.334	3,100	0.75	9.00	49.4	184
MG(1)13512LB-(2)25	12	2.080	73.43	2.40	0.094	1,500	0.22	2.64	28.3	184
MG(1)13512MB-(2)25	12	2.380	84.03	3.11	0.122	1,700	0.25	3.00	32.6	184
MG(1)13512HB-(2)25	12	2.549	89.99	3.44	0.135	1,800	0.28	3.36	34.5	184
MG(1)13512XB-(2)25	12	3.280	115.80	5.28	0.208	2,300	0.38	4.56	41.3	184
MG(1)13512YB-(2)25	12	3.941	139.10	7.16	0.282	2,800	0.50	6.00	46.9	184
MG(1)13512ZB-(2)25	12	4.377	154.50	8.48	0.334	3,100	0.75	9.00	49.6	184
MG(1)13512LF-(2)25	12	2.080	73.43	2.40	0.094	1,500	0.22	2.64	27.7	184
MG(1)13512MF-(2)25	12	2.380	84.03	3.11	0.122	1,700	0.25	3.00	31.8	184
MG(1)13512HF-(2)25	12	2.549	89.99	3.44	0.135	1,800	0.28	3.36	33.4	184
MG(1)13512XF-(2)25	12	3.280	115.80	5.28	0.208	2,300	0.38	4.56	40.8	184
MG(1)13512YF-(2)25	12	3.941	139.10	7.16	0.282	2,800	0.50	6.00	46.4	184
MG(1)13512ZF-(2)25	12	4.377	154.50	8.48	0.334	3,100	0.75	9.00	49.2	184

Remarks:

(1)-Electric Characteristics:

A: Standard 2-Pin; **T**: Frequency Generation 3-Pin or more.

(2)-Function:

A: None Automatic Restart;

O: Automatic Restart & Locked Current Protection;

R: Rotate Detection Automatic Restart & Locked Current Protection;

W: Pulse Width Modulation & Automatic Restart & Locked Current Protection (PWM).

The spec is for reference only, it's subject to change without any prior notice

172x150x50.8mm series A

Bearing Type	☑ 2 Ball	☐ Sleeve	☐ Rifle	☐ FDB
Speed Control	☑ Voltage	☐ Temperature	☑ PWM	
	☑ ±5% Speed tolerance		☑ ±10% Speed tolerance	
Frame Type	☐ 4 Screw	☑ 8 Screw		
Signal output	☑ Alarm Signal	☑ Tacho Signal		
Protection	☑ Lock	☑ Reverse	☐ Over Voltage	☐ Over heat
ESD ①	☐ Class Ⅰ	☑ Class Ⅱ	☑ Class Ⅲ	
Insulation ②	☑ Class A	☐ Class B	☐ Class C	☐ Class F
Safety	☑ UL	☑ TUV	☑ CE	☐ VDE
Motor type	☑ Uni-phase	☐ 2 phase	☐ 3 phase	

AIR FLOW/STATIC-PRESSURE

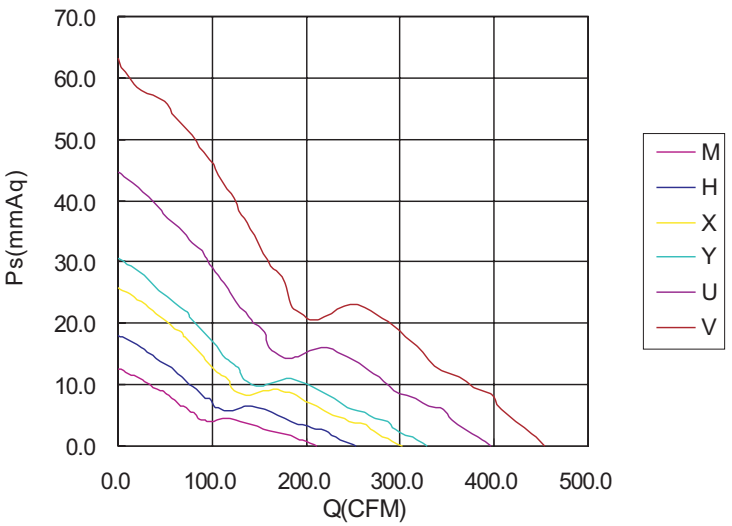

OUTLINE(mm)

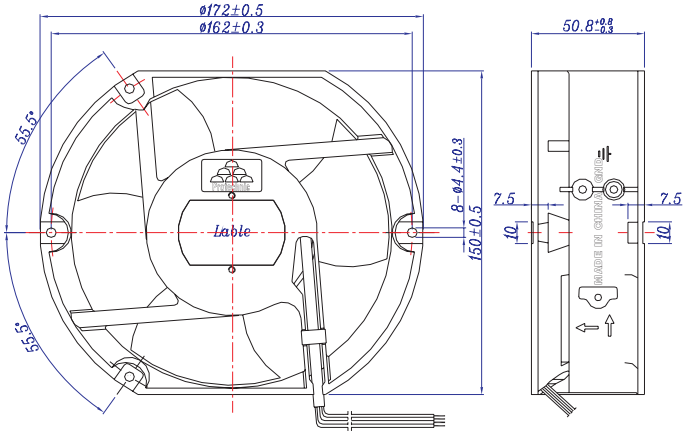

Note:

①-Reference standard: IEC 61000-4-2

②-Reference standard: UL 1446

Item No.	Operating Voltage	Maximum Air Flow		Maximum Air Pressure		Speed	Rated Current	Input Power	Noise	Weight
	(V)	(CMM)	(CFM)	(mmAq)	(inchAq)	(rpm)	(A)	(W)	dB(A)	(g)
MG(1)1712MB-(2)51	12	5.942	209.70	12.50	0.495	2,800	0.79	9.48	50.0	830
MG(1)1712HB-(2)51	12	7.110	251.00	18.00	0.709	3,350	1.32	15.84	55.0	830
MG(1)1712XB-(2)51	12	8.489	299.70	25.60	1.010	4,000	2.10	25.20	60.0	830
MG(1)1712YB-(2)51	12	9.230	325.00	30.30	1.194	4,350	3.80	44.16	63.5	830
MG(1)1712UB-(2)51	12	11.140	393.30	44.20	1.740	5,250	5.00	67.20	69.0	830
MG(1)1724MB-(2)51	24	5.942	209.70	12.50	0.495	2,800	0.39	9.36	50.0	830
MG(1)1724HB-(2)51	24	7.110	251.00	18.00	0.709	3,350	0.66	15.84	55.0	830
MG(1)1724XB-(2)51	24	8.489	299.70	25.60	1.010	4,000	1.00	24.00	60.0	830
MG(1)1724YB-(2)51	24	9.230	325.00	30.30	1.194	4,350	2.00	48.00	63.5	830
MG(1)1724UB-(2)51	24	11.140	393.30	44.20	1.740	5,250	3.00	72.00	69.0	830
MG(1)1724VB-(2)51	24	12.796	451.70	62.80	2.472	6,300	4.00	96.00	73.0	830
MG(1)1748HB-(2)51	48	7.110	251.00	18.00	0.709	3,350	0.52	24.96	55.0	830
MG(1)1748XB-(2)51	48	8.489	299.70	25.60	1.010	4,000	0.73	35.04	60.0	830
MG(1)1748YB-(2)51	48	9.230	325.00	30.30	1.194	4,350	0.92	44.16	63.5	830
MG(1)1748UB-(2)51	48	11.140	393.30	44.20	1.740	5,250	1.40	67.20	69.0	830
MG(1)1748VB-(2)51	48	12.796	451.70	62.80	2.472	6,300	2.30	110.40	73.0	830

Remarks:

(1)-Electric Characteristics:

A: Standard 2-Pin; **T**: Frequency Generation 3-Pin or more.

(2)-Function:

O: Automatic Restart & Locked Current Protection;

R: Rotate Detection Automatic Restart & Locked Current Protection;

S: Thermo-Control Speed, Automatic Restart & Locked Current Protection;

W: Pulse Width Modulation & Automatic Restart & Locked Current Protection (PWM).

The spec is for reference only, it's subject to change without any prior notice

Ø175x69mm series A

Bearing Type	☑ 2 Ball	☐ Sleeve	☐ Rifle	☐ FDB
Speed Control	☑ Voltage	☐ Temperature	☑ PWM	
	☑ ±5% Speed tolerance		☑ ±10% Speed tolerance	
Frame Type	☑ 4 Screw	☐ 8 Screw		
Signal output	☑ Alarm Signal	☐ Tacho Signal		
Protection	☑ Lock	☑ Reverse	☐ Over Voltage	☐ Over heat
ESD ①	☐ Class Ⅰ	☑ Class Ⅱ	☑ Class Ⅲ	
Insulation ②	☑ Class A	☐ Class B	☐ Class C	☐ Class F
Safety	☑ UL	☑ TUV	☑ CE	☐ VDE
Motor type	☑ Uni-phase	☐ 2 phase	☐ 3 phase	

AIR FLOW/STATIC-PRESSURE

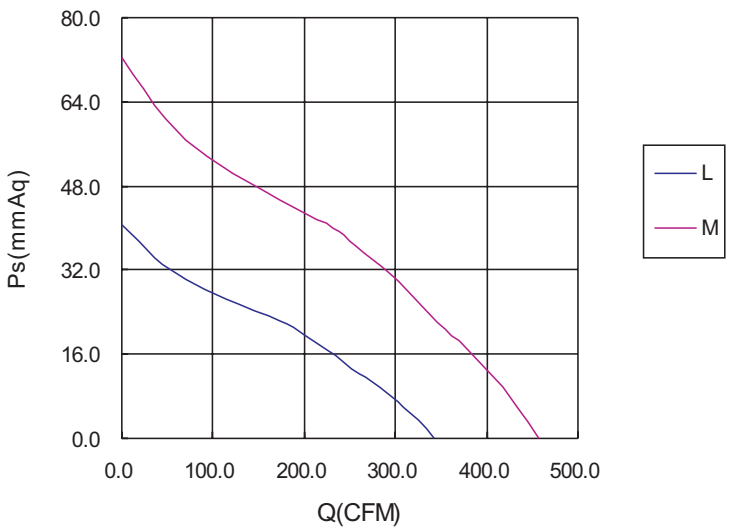

OUTLINE(mm)

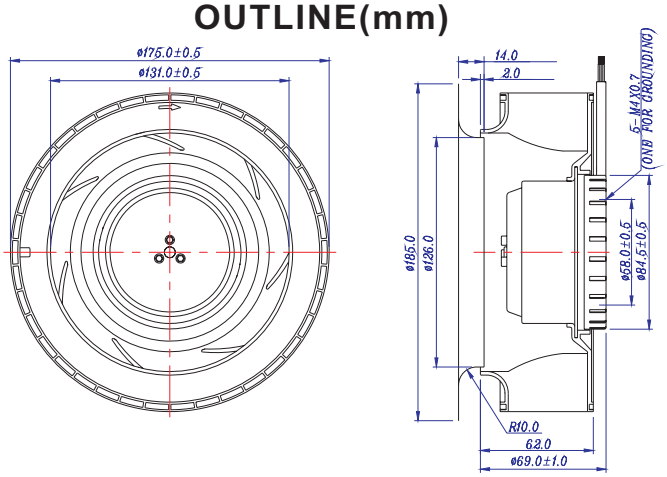

Note:

①-Reference standard: IEC 61000-4-2

②-Reference standard: UL 1446

Item No.	Operating Voltage	Maximum Air Flow		Maximum Air Pressure		Speed	Rated Current	Input Power	Noise	Weight
	(V)	(CMM)	(CFM)	(mmAq)	(inchAq)	(rpm)	(A)	(W)	dB(A)	(g)
MB(1)1724LB-(2)69	24	9.705	342.60	40.70	1.600	3,000	1.90	45.60	66.0	920
MB(1)1724MB-(2)69	24	12.941	456.80	72.40	2.850	4,000	4.70	112.80	71.9	920
MB(1)1748LB-(2)69	48	9.705	342.60	40.70	1.600	3,000	1.00	48.00	66.0	920
MB(1)1748MB-(2)69	48	12.941	456.80	72.40	2.850	4,000	2.40	115.20	71.9	920

Remarks:

(1)-Electric Characteristics:

A: Standard 2-Pin; **T**: Frequency Generation 3-Pin or more.

(2)-Function:

O: Automatic Restart & Locked Current Protection;

R: Rotate Detection Automatic Restart & Locked Current Protection;

S: Thermo-Control Speed, Automatic Restart & Locked Current Protection;

W: Pulse Width Modulation & Automatic Restart & Locked Current Protection (PWM).

The spec is for reference only, it's subject to change without any prior notice

180x180x40mm series A

Bearing Type	☑ 2 Ball	☐ Sleeve	☐ Rifle	☐ FDB
Speed Control	☑ Voltage	☐ Temperature	☑ PWM	
	☑ ±5% Speed tolerance		☑ ±10% Speed tolerance	
Frame Type	☐ 4 Screw	☑ 8 Screw		
Signal output	☑ Alarm Signal	☑ Tacho Signal		
Protection	☑ Lock	☑ Reverse	☐ Over Voltage	☐ Over heat
ESD ①	☐ Class Ⅰ	☑ Class Ⅱ	☑ Class Ⅲ	
Insulation ②	☑ Class A	☐ Class B	☐ Class C	☐ Class F
Safety	☑ UL	☑ TUV	☑ CE	☐ VDE
Motor type	☑ Uni-phase	☐ 2 phase	☐ 3 phase	

AIR FLOW/STATIC-PRESSURE

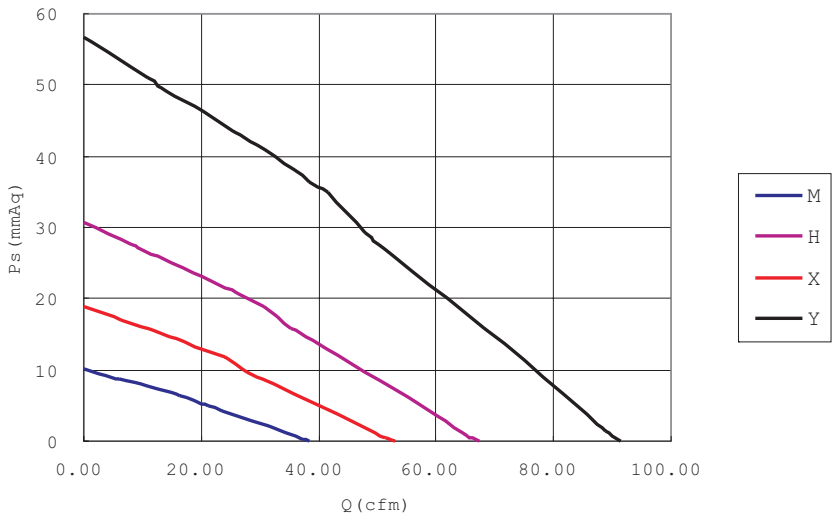

OUTLINE(mm)

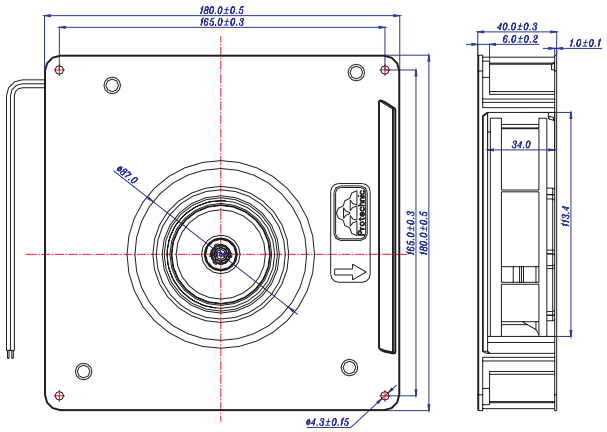

Note:

①-Reference standard: IEC 61000-4-2

②-Reference standard: UL 1446

Item No.	Operating Voltage	Maximum Air Flow		Maximum Air Pressure		Speed	Rated Current	Input Power	Noise	Weight
	(V)	(CMM)	(CFM)	(mmAq)	(inchAq)	(rpm)	(A)	(W)	dB(A)	(g)
MB(1)18012MB-(2)40	12	1.091	38.50	10.10	0.390	1,600	0.26	3.12	44.5	920
MB(1)18012HB-(2)40	12	1.499	52.90	19.00	0.750	2,200	0.48	5.76	52.0	920
MB(1)18012XB-(2)40	12	2.045	72.20	35.30	1.390	3,000	1.14	13.68	59.5	920
MB(1)18012YB-(2)40	12	2.725	96.20	62.80	2.740	4,000	2.64	31.68	66.3	920
MB(1)18024MB-(2)40	24	1.091	38.50	10.10	0.390	1,600	0.13	3.12	44.5	920
MB(1)18024HB-(2)40	24	1.499	52.90	19.00	0.750	2,200	0.24	5.76	52.0	920
MB(1)18024XB-(2)40	24	2.045	72.20	35.30	1.390	3,000	0.57	13.68	59.5	920
MB(1)18024YB-(2)40	24	2.725	96.20	62.80	2.740	4,000	1.32	31.68	66.3	920
MB(1)18048MB-(2)40	48	1.091	38.50	10.10	0.390	1,600	0.09	4.08	44.5	920
MB(1)18048HB-(2)40	48	1.499	52.90	19.00	0.750	2,200	0.15	7.20	52.0	920
MB(1)18048XB-(2)40	48	2.045	72.20	35.30	1.390	3,000	0.29	13.68	59.5	920
MB(1)18048YB-(2)40	48	2.725	96.20	62.80	2.740	4,000	0.66	31.68	66.3	920

Remarks:

(1)-Electric Characteristics:

A: Standard 2-Pin; **T**: Frequency Generation 3-Pin or more.

(2)-Function:

O: Automatic Restart & Locked Current Protection;

R: Rotate Detection Automatic Restart & Locked Current Protection;

W: Pulse Width Modulation & Automatic Restart & Locked Current Protection (PWM).

The spec is for reference only, it's subject to change without any prior notice

Φ225x99mm series A

Bearing Type	☑ 2 Ball	☐ Sleeve	☐ Rifle	☐ FDB
Speed Control	☑ Voltage	☐ Temperature	☑ PWM	
	☑ ±5% Speed tolerance		☑ ±10% Speed tolerance	
Frame Type	☑ 4 Screw	☐ 8 Screw		
Signal output	☑ Alarm Signal	☑ Tacho Signal		
Protection	☑ Lock	☑ Reverse	☐ Over Voltage	☐ Over heat
ESD ①	☐ Class Ⅰ	☑ Class Ⅱ	☑ Class Ⅲ	
Insulation ②	☐ Class A	☐ Class B	☐ Class C	☑ Class F
Safety	☑ UL	☑ TUV	☑ CE	☐ VDE
Motor type	☑ Uni-phase	☐ 2 phase	☐ 3 phase	

AIR FLOW/STATIC-PRESSURE

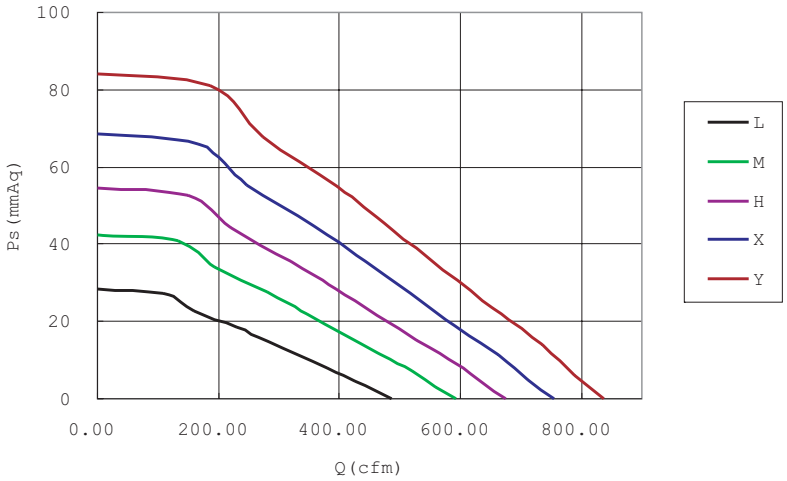

OUTLINE(mm)

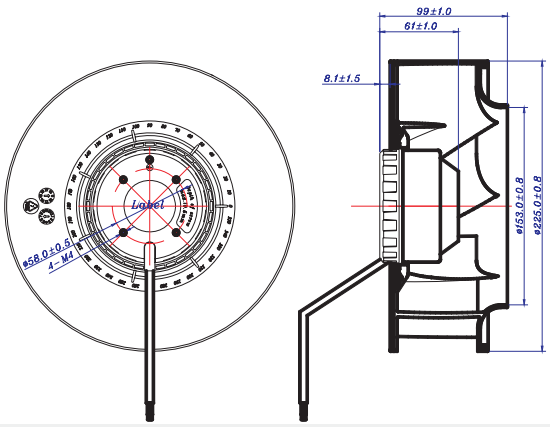

Note:

①-Reference standard: IEC 61000-4-2

②-Reference standard: UL 1446

Item No.	Operating Voltage	Maximum Air Flow		Maximum Air Pressure		Speed	Rated Current	Input Power	Noise	Weight
	(V)	(CMM)	(CFM)	(mmAq)	(inchAq)	(rpm)	(A)	(W)	dB(A)	(g)
MB(1)22524LB-(2)99	24	13.760	485.70	28.30	1.110	1,800	2.10	50.40	64.6	1500
MB(1)22524MB-(2)99	24	16.820	593.60	42.70	1.680	2,200	3.50	84.00	69.4	1500
MB(1)22524HB-(2)99	24	19.110	674.60	54.70	2.150	2,500	4.80	115.20	71.6	1500
MB(1)22524XB-(2)99	24	21.400	755.50	68.60	2.700	2,800	6.30	151.20	75.2	1500
MB(1)22548LB-(2)99	48	13.760	485.70	28.30	1.110	1,800	1.10	52.80	64.6	1500
MB(1)22548MB-(2)99	48	16.820	593.60	42.70	1.680	2,200	1.80	86.40	69.4	1500
MB(1)22548HB-(2)99	48	19.110	674.60	54.70	2.150	2,500	2.40	115.20	71.6	1500
MB(1)22548XB-(2)99	48	21.400	755.50	68.60	2.700	2,800	3.20	153.60	75.2	1500
MB(1)22548YB-(2)99	48	23.700	836.50	84.10	3.310	3,100	4.80	230.40	77.6	1500

Remarks:

(1)-Electric Characteristics:

A: Standard 2-Pin; **T**: Frequency Generation 3-Pin or more.

(2)-Function:

O: Automatic Restart & Locked Current Protection;

R: Rotate Detection Automatic Restart & Locked Current Protection;

W: Pulse Width Modulation & Automatic Restart & Locked Current Protection (PWM).

The spec is for reference only, it's subject to change without any prior notice

60x60x25mm IP68 series ③

Bearing Type	☑ 2 Ball	☐ Sleeve	☐ Rifle	☐ FDB
Speed Control	☑ Voltage	☐ Temperature	☑ PWM	
	☐ ±5% Speed tolerance		☑ ±10% Speed tolerance	
Frame Type	☑ 4 Screw	☑ 8 Screw		
Signal output	☑ Alarm Signal	☑ Tacho Signal		
Protection	☑ Lock	☑ Reverse	☐ Over Voltage	☐ Over heat
ESD ①	☐ Class Ⅰ	☑ Class Ⅱ	☐ Class Ⅲ	
Insulation ②	☑ Class A	☐ Class B	☐ Class C	☐ Class F
Safety	☑ UL	☑ TUV	☑ CE	☐ VDE
Motor type	☑ Uni-phase	☑ 2 phase	☐ 3 phase	

AIR FLOW/STATIC-PRESSURE

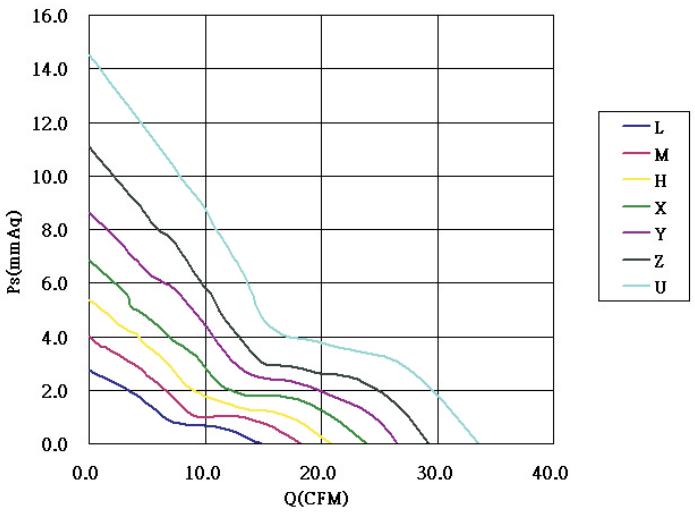

OUTLINE(mm)

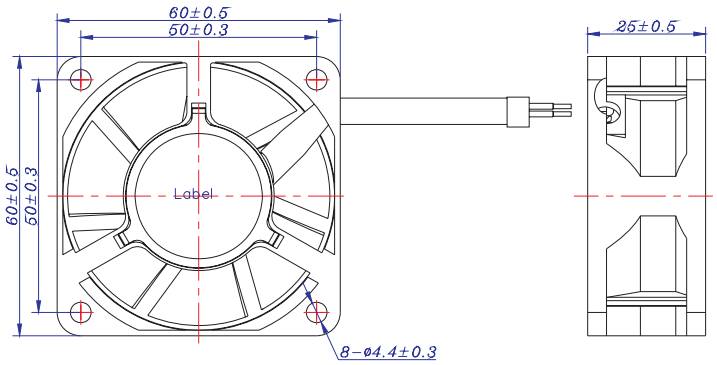

Note:

①-Reference standard: IEC 61000-4-2
②-Reference standard: UL 1446
③-Reference standard: IEC 60529

Item No.	Operating Voltage	Maximum Air Flow		Maximum Air Pressure		Speed	Rated Current	Input Power	Noise	Weight
	(V)	(CMM)	(CFM)	(mmAq)	(inchAq)	(rpm)	(A)	(W)	dB(A)	(g)
MG(1)6012LB-(2)25	12	0.420	14.83	2.81	0.111	3,000	0.11	1.32	24.6	69
MG(1)6012MB-(2)25	12	0.527	18.59	4.11	0.162	3,600	0.13	1.56	29.0	69
MG(1)6012HB-(2)25	12	0.598	21.10	5.42	0.213	4,200	0.17	2.04	33.3	69
MG(1)6012XB-(2)25	12	0.696	24.56	6.94	0.273	4,800	0.20	2.40	37.1	69
MG(1)6012YB-(2)25	12	0.773	27.28	8.72	0.343	5,400	0.26	3.12	39.9	69
MG(1)6024LB-(2)25	24	0.420	14.83	2.81	0.111	3,000	0.09	2.16	24.6	69
MG(1)6024MB-(2)25	24	0.527	18.59	4.11	0.162	3,600	0.12	2.88	29.0	69
MG(1)6024HB-(2)25	24	0.598	21.10	5.42	0.213	4,200	0.14	3.36	33.3	69
MG(1)6024XB-(2)25	24	0.696	24.56	6.94	0.273	4,800	0.17	4.08	37.1	69
MG(1)6024YB-(2)25	24	0.773	27.28	8.72	0.343	5,400	0.20	4.80	39.9	69
MG(1)6024ZB-(2)25	24	0.824	29.25	11.10	0.437	6,000	0.22	5.28	43.3	69
MG(1)6024UB-(2)25	24	0.944	33.52	14.50	0.571	6,800	0.29	6.96	47.0	69

Remarks:

(1)-Electric Characteristics:

A: Standard 2-Pin; **T**: Frequency Generation 3-Pin or more.

(2)-Function:

O: Automatic Restart & Locked Current Protection;

R: Rotate Detection Automatic Restart & Locked Current Protection;

W: Pulse Width Modulation & Automatic Restart & Locked Current Protection (PWM).

The spec is for reference only, it's subject to change without any prior notice

60x60x25mm IP55 series ③

Bearing Type	☑ 2 Ball	☐ Sleeve	☐ Rifle	☐ FDB
Speed Control	☑ Voltage	☐ Temperature	☑ PWM	
	☐ ±5% Speed tolerance		☑ ±10% Speed tolerance	
Frame Type	☑ 4 Screw	☑ 8 Screw		
Signal output	☑ Alarm Signal	☑ Tacho Signal		
Protection	☑ Lock	☑ Reverse	☐ Over Voltage	☐ Over heat
ESD ①	☐ Class Ⅰ	☑ Class Ⅱ	☑ Class Ⅲ	
Insulation ②	☑ Class A	☐ Class B	☐ Class C	☐ Class F
Safety	☑ UL	☑ TUV	☑ CE	☐ VDE
Motor type	☑ Uni-phase	☑ 2 phase	☐ 3 phase	

AIR FLOW/STATIC-PRESSURE

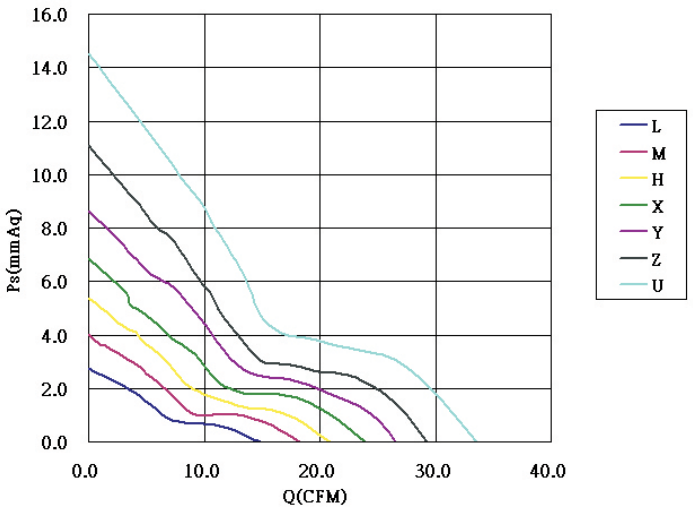

OUTLINE(mm)

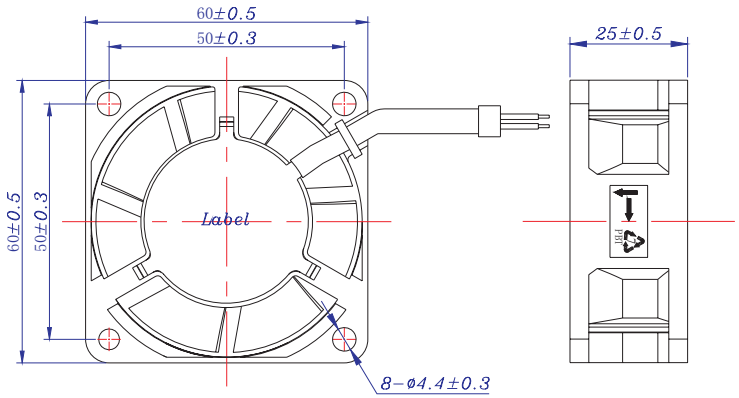

Note:

①-Reference standard: IEC 61000-4-2
②-Reference standard: UL 1446
③-Reference standard: IEC 60529

Item No.	Operating Voltage	Maximum Air Flow		Maximum Air Pressure		Speed	Rated Current	Input Power	Noise	Weight
	(V)	(CMM)	(CFM)	(mmAq)	(inchAq)	(rpm)	(A)	(W)	dB(A)	(g)
MG(1)6012LB-(2)25	12	0.420	14.83	2.81	0.111	3,000	0.11	1.32	24.6	69
MG(1)6012MB-(2)25	12	0.527	18.59	4.11	0.162	3,600	0.13	1.56	29.0	69
MG(1)6012HB-(2)25	12	0.598	21.10	5.42	0.213	4,200	0.17	2.04	33.3	69
MG(1)6012XB-(2)25	12	0.696	24.56	6.94	0.273	4,800	0.20	2.40	37.1	69
MG(1)6012YB-(2)25	12	0.773	27.28	8.72	0.343	5,400	0.26	3.12	39.9	69
MG(1)6012ZB-(2)25	12	0.824	29.25	11.10	0.437	6,000	0.31	3.72	43.3	69
MG(1)6012UB-(2)25	12	0.944	33.52	14.50	0.571	6,800	0.38	4.56	47.0	69
MG(1)6024LB-(2)25	24	0.420	14.83	2.81	0.111	3,000	0.09	2.16	24.6	69
MG(1)6024MB-(2)25	24	0.527	18.59	4.11	0.162	3,600	0.12	2.88	29.0	69
MG(1)6024HB-(2)25	24	0.598	21.10	5.42	0.213	4,200	0.14	3.36	33.3	69
MG(1)6024XB-(2)25	24	0.696	24.56	6.94	0.273	4,800	0.17	4.08	37.1	69
MG(1)6024YB-(2)25	24	0.773	27.28	8.72	0.343	5,400	0.20	4.80	39.9	69
MG(1)6024ZB-(2)25	24	0.824	29.25	11.10	0.437	6,000	0.22	5.28	43.3	69
MG(1)6024UB-(2)25	24	0.944	33.52	14.50	0.571	6,800	0.29	6.96	47.0	69

Remarks:

(1)-Electric Characteristics:

A: Standard 2-Pin; **T**: Frequency Generation 3-Pin or more.

(2)-Function:

O: Automatic Restart & Locked Current Protection;

R: Rotate Detection Automatic Restart & Locked Current Protection;

W: Pulse Width Modulation & Automatic Restart & Locked Current Protection (PWM).

The spec is for reference only, it's subject to change without any prior notice

60x60x25mm IPX5 series ③

Bearing Type	☑ 2 Ball	☐ Sleeve	☐ Rifle	☐ FDB
Speed Control	☑ Voltage	☐ Temperature	☑ PWM	
	☐ ±5% Speed tolerance		☑ ±10% Speed tolerance	
Frame Type	☑ 4 Screw	☑ 8 Screw		
Signal output	☑ Alarm Signal	☑ Tacho Signal		
Protection	☑ Lock	☑ Reverse	☐ Over Voltage	☐ Over heat
ESD ①	☐ Class Ⅰ	☐ Class Ⅱ	☑ Class Ⅲ	
Insulation ②	☑ Class A	☐ Class B	☐ Class C	☐ Class F
Safety	☑ UL	☑ TUV	☑ CE	☐ VDE
Motor type	☑ Uni-phase	☑ 2 phase	☐ 3 phase	

AIR FLOW/STATIC-PRESSURE

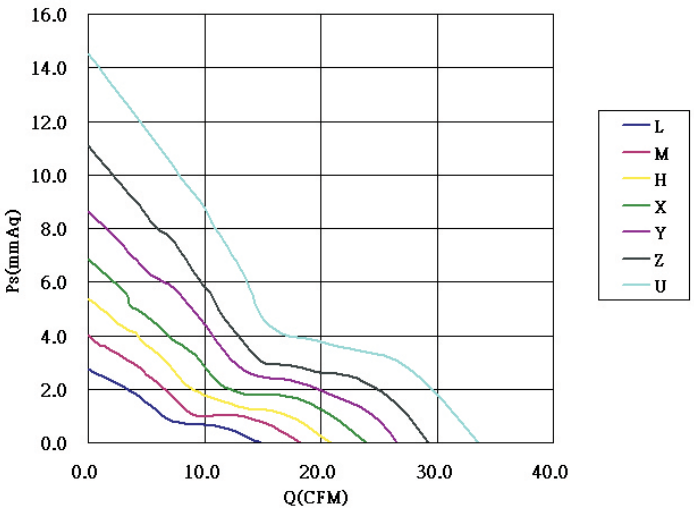

OUTLINE(mm)

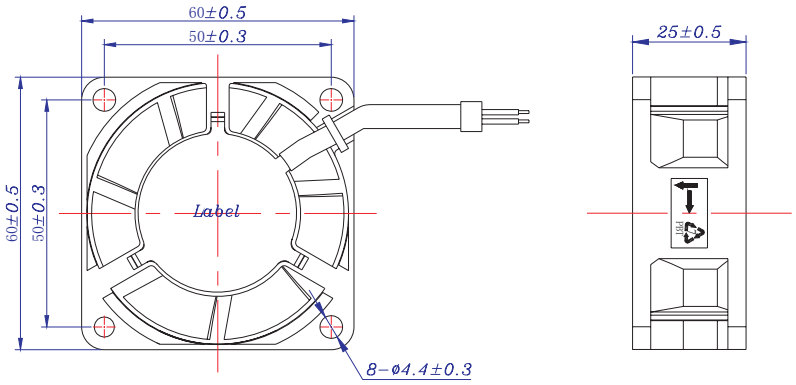

Note:

①-Reference standard: IEC 61000-4-2
②-Reference standard: UL 1446
③-Reference standard: IEC 60529

Item No.	Operating Voltage	Maximum Air Flow		Maximum Air Pressure		Speed	Rated Current	Input Power	Noise	Weight
	(V)	(CMM)	(CFM)	(mmAq)	(inchAq)	(rpm)	(A)	(W)	dB(A)	(g)
MG(1)6012LB-(2)25	12	0.420	14.83	2.81	0.111	3,000	0.11	1.32	24.6	69
MG(1)6012MB-(2)25	12	0.527	18.59	4.11	0.162	3,600	0.13	1.56	29.0	69
MG(1)6012HB-(2)25	12	0.598	21.10	5.42	0.213	4,200	0.17	2.04	33.3	69
MG(1)6012XB-(2)25	12	0.696	24.56	6.94	0.273	4,800	0.20	2.40	37.1	69
MG(1)6012YB-(2)25	12	0.773	27.28	8.72	0.343	5,400	0.26	3.12	39.9	69
MG(1)6012ZB-(2)25	12	0.824	29.25	11.10	0.437	6,000	0.31	3.72	43.3	69
MG(1)6012UB-(2)25	12	0.944	33.52	14.50	0.571	6,800	0.38	4.56	47.0	69
MG(1)6024LB-(2)25	24	0.420	14.83	2.81	0.111	3,000	0.09	2.16	24.6	69
MG(1)6024MB-(2)25	24	0.527	18.59	4.11	0.162	3,600	0.12	2.88	29.0	69
MG(1)6024HB-(2)25	24	0.598	21.10	5.42	0.213	4,200	0.14	3.36	33.3	69
MG(1)6024XB-(2)25	24	0.696	24.56	6.94	0.273	4,800	0.17	4.08	37.1	69
MG(1)6024YB-(2)25	24	0.773	27.28	8.72	0.343	5,400	0.20	4.80	39.9	69
MG(1)6024ZB-(2)25	24	0.824	29.25	11.10	0.437	6,000	0.22	5.28	43.3	69
MG(1)6024UB-(2)25	24	0.944	33.52	14.50	0.571	6,800	0.29	6.96	47.0	69

Remarks:

(1)-Electric Characteristics:

A: Standard 2-Pin; **T**: Frequency Generation 3-Pin or more.

(2)-Function:

O: Automatic Restart & Locked Current Protection;

R: Rotate Detection Automatic Restart & Locked Current Protection;

W: Pulse Width Modulation & Automatic Restart & Locked Current Protection (PWM).

The spec is for reference only, it's subject to change without any prior notice

70x70x25mm IP5X series ③

Bearing Type	☑ 2 Ball	☐ Sleeve	☐ Rifle	☐ FDB
Speed Control	☑ Voltage	☐ Temperature	☑ PWM	
	☐ ±5% Speed tolerance		☑ ±10% Speed tolerance	
Frame Type	☑ 4 Screw	☑ 8 Screw		
Signal output	☑ Alarm Signal	☑ Tacho Signal		
Protection	☑ Lock	☑ Reverse	☐ Over Voltage	☐ Over heat
ESD ①	☐ Class Ⅰ	☑ Class Ⅱ	☑ Class Ⅲ	
Insulation ②	☑ Class A	☐ Class B	☐ Class C	☐ Class F
Safety	☑ UL	☑ TUV	☑ CE	☐ VDE
Motor type	☑ Uni-phase	☑ 2 phase	☐ 3 phase	

AIR FLOW/STATIC-PRESSURE

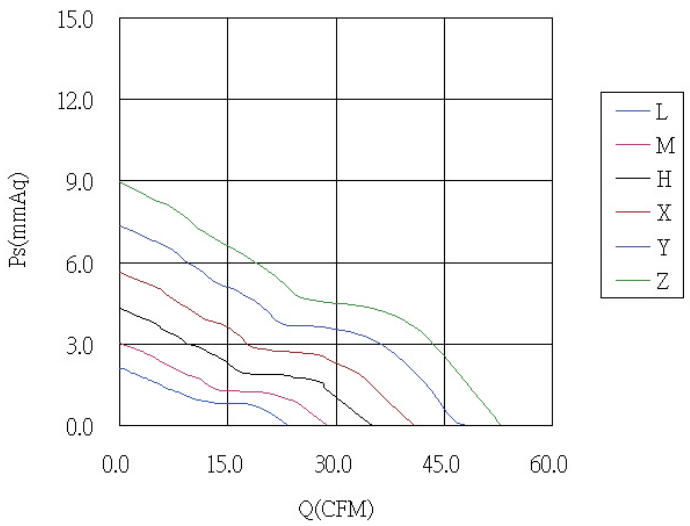

OUTLINE(mm)

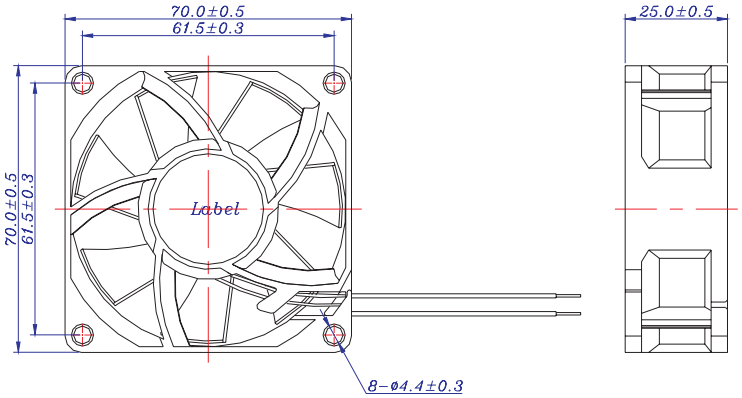

Note:

①-Reference standard: IEC 61000-4-2
②-Reference standard: UL 1446
③-Reference standard: IEC 60529

Item No.	Operating Voltage	Maximum Air Flow		Maximum Air Pressure		Speed	Rated Current	Input Power	Noise	Weight
	(V)	(CMM)	(CFM)	(mmAq)	(inchAq)	(rpm)	(A)	(W)	dB(A)	(g)
MG(1)7012LB-(2)25	12	0.655	23.26	2.08	0.081	2,500	0.12	1.44	24.8	75
MG(1)7012MB-(2)25	12	0.811	28.80	3.10	0.122	3,000	0.17	2.04	31.0	75
MG(1)7012HB-(2)25	12	0.985	35.00	4.32	0.170	3,600	0.22	2.64	35.4	75
MG(1)7012XB-(2)25	12	1.152	40.92	5.64	0.222	4,200	0.30	3.60	39.2	75
MG(1)7012YB-(2)25	12	1.359	48.27	7.36	0.289	4,800	0.39	4.68	43.3	75
MG(1)7012ZB-(2)25	12	1.490	52.93	8.96	0.352	5,400	0.43	5.16	46.6	75

Remarks:

(1)-Electric Characteristics:

A: Standard 2-Pin; **T**: Frequency Generation 3-Pin or more.

(2)-Function:

A: None Automatic Restart;
O: Automatic Restart & Locked Current Protection;
R: Rotate Detection Automatic Restart & Locked Current Protection;
S: Thermo-Control Speed, Automatic Restart & Locked Current Protection;
W: Pulse Width Modulation & Automatic Restart & Locked Current Protection (PWM).

The spec is for reference only, it's subject to change without any prior notice

80x80x25mm IP68 series ③

Bearing Type	☑ 2 Ball	☐ Sleeve	☐ Rifle	☐ FDB
Speed Control	☑ Voltage	☐ Temperature	☑ PWM	
	☐ ±5% Speed tolerance		☑ ±10% Speed tolerance	
Frame Type	☑ 4 Screw	☑ 8 Screw		
Signal output	☑ Alarm Signal	☑ Tacho Signal		
Protection	☑ Lock	☑ Reverse	☐ Over Voltage	☐ Over heat
ESD ①	☐ Class Ⅰ	☐ Class Ⅱ	☑ Class Ⅲ	
Insulation ②	☑ Class A	☐ Class B	☐ Class C	☐ Class F
Safety	☑ UL	☑ TUV	☑ CE	☐ VDE
Motor type	☑ Uni-phase	☑ 2 phase	☐ 3 phase	

AIR FLOW/STATIC-PRESSURE

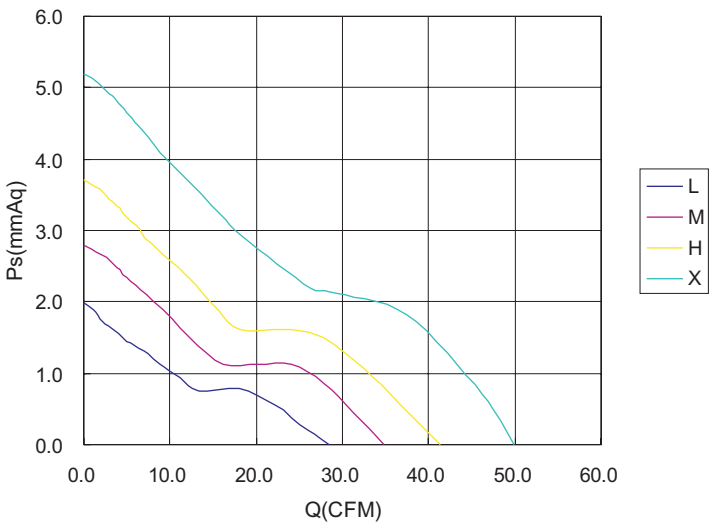

OUTLINE(mm)

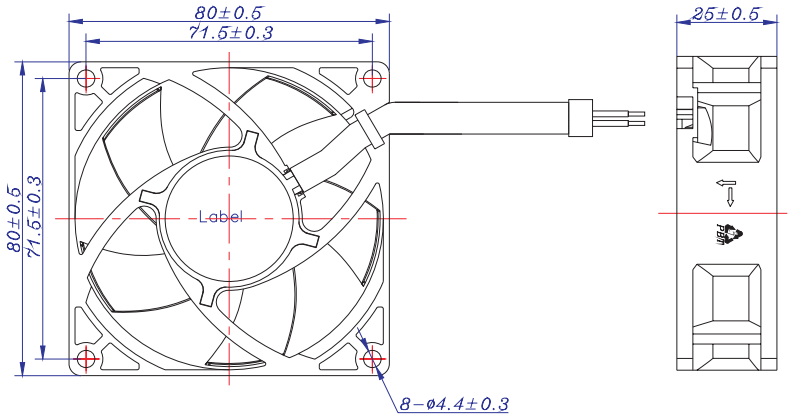

Note:

①-Reference standard: IEC 61000-4-2
②-Reference standard: UL 1446
③-Reference standard: IEC 60529

Item No.	Operating Voltage	Maximum Air Flow		Maximum Air Pressure		Speed	Rated Current	Input Power	Noise	Weight
	(V)	(CMM)	(CFM)	(mmAq)	(inchAq)	(rpm)	(A)	(W)	dB(A)	(g)
MG(1)8012LB-(2)25	12	0.806	28.46	1.98	0.078	2,100	0.12	1.44	23.1	85
MG(1)8012MB-(2)25	12	0.987	34.85	2.79	0.110	2,500	0.15	1.80	29.0	85
MG(1)8012HB-(2)25	12	1.171	41.34	3.71	0.146	3,000	0.24	2.88	33.2	85
MG(1)8012XB-(2)25	12	1.413	49.89	5.19	0.204	3,600	0.39	4.68	37.3	85
MG(1)8024LB-(2)25	24	0.806	28.46	1.98	0.078	2,100	0.09	2.16	23.1	85
MG(1)8024MB-(2)25	24	0.987	34.85	2.79	0.110	2,500	0.11	2.64	29.0	85
MG(1)8024HB-(2)25	24	1.171	41.34	3.71	0.146	3,000	0.16	3.84	33.2	85
MG(1)8024XB-(2)25	24	1.413	49.89	5.19	0.204	3,600	0.23	5.52	37.3	85

Remarks:

(1)-Electric Characteristics:

A: Standard 2-Pin; **T**: Frequency Generation 3-Pin or more.

(2)-Function:

O: Automatic Restart & Locked Current Protection;

R: Rotate Detection Automatic Restart & Locked Current Protection;

W: Pulse Width Modulation & Automatic Restart & Locked Current Protection (PWM).

The spec is for reference only, it's subject to change without any prior notice

80x80x25mm IP55 series ③

Bearing Type	☑ 2 Ball	☐ Sleeve	☐ Rifle	☐ FDB
Speed Control	☑ Voltage	☐ Temperature	☑ PWM	
	☐ ±5% Speed tolerance		☑ ±10% Speed tolerance	
Frame Type	☑ 4 Screw	☑ 8 Screw		
Signal output	☑ Alarm Signal	☑ Tacho Signal		
Protection	☑ Lock	☑ Reverse	☐ Over Voltage	☐ Over heat
ESD ①	☐ Class Ⅰ	☐ Class Ⅱ	☑ Class Ⅲ	
Insulation ②	☑ Class A	☐ Class B	☐ Class C	☐ Class F
Safety	☑ UL	☑ TUV	☑ CE	☐ VDE
Motor type	☑ Uni-phase	☑ 2 phase	☐ 3 phase	

AIR FLOW/STATIC-PRESSURE

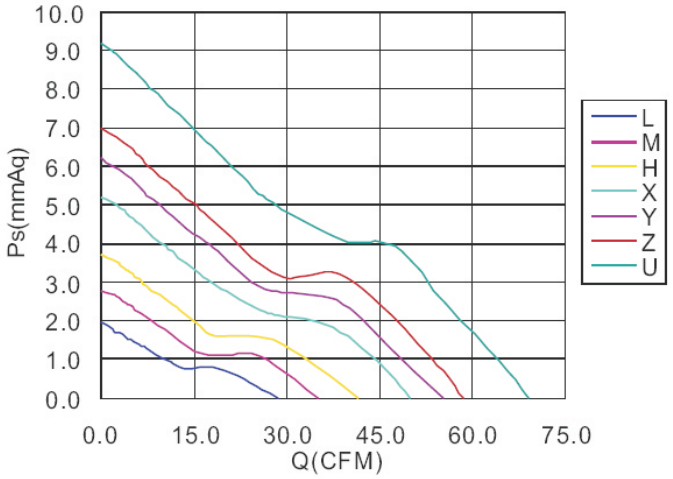

OUTLINE(mm)

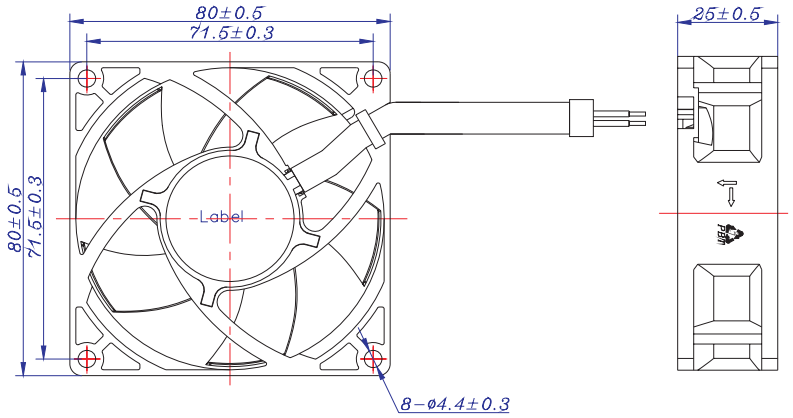

Note:

①-Reference standard: IEC 61000-4-2
②-Reference standard: UL 1446
③-Reference standard: IEC 60529

Item No.	Operating Voltage	Maximum Air Flow		Maximum Air Pressure		Speed	Rated Current	Input Power	Noise	Weight
	(V)	(CMM)	(CFM)	(mmAq)	(inchAq)	(rpm)	(A)	(W)	dB(A)	(g)
MG(1)8012LB-(2)25	12	0.806	28.46	1.98	0.078	2,100	0.12	1.44	23.1	90
MG(1)8012MB-(2)25	12	0.987	34.85	2.79	0.110	2,500	0.15	1.80	29.0	90
MG(1)8012HB-(2)25	12	1.171	41.34	3.71	0.146	3,000	0.24	2.88	33.2	90
MG(1)8012XB-(2)25	12	1.413	49.89	5.19	0.204	3,600	0.39	4.68	37.3	90
MG(1)8012YB-(2)25	12	1.562	55.13	6.21	0.244	3,900	0.42	5.04	39.2	90
MG(1)8012ZB-(2)25	12	1.653	58.35	7.00	0.276	4,200	0.54	6.48	42.3	90
MG(1)8012UB-(2)25	12	1.951	68.88	9.17	0.361	4,800	0.66	7.92	45.2	90
MG(1)8024LB-(2)25	24	0.806	28.46	1.98	0.078	2,100	0.09	2.16	23.1	90
MG(1)8024MB-(2)25	24	0.987	34.85	2.79	0.110	2,500	0.11	2.64	29.0	90
MG(1)8024HB-(2)25	24	1.171	41.34	3.71	0.146	3,000	0.16	3.84	33.2	90
MG(1)8024XB-(2)25	24	1.413	49.89	5.19	0.204	3,600	0.23	5.52	37.3	90
MG(1)8024YB-(2)25	24	1.562	55.13	6.21	0.244	3,900	0.26	6.24	39.2	90
MG(1)8024ZB-(2)25	24	1.653	58.35	7.00	0.276	4,200	0.30	7.20	42.3	90
MG(1)8024UB-(2)25	24	1.951	68.88	9.17	0.361	4,800	0.48	11.52	45.2	90

Remarks:

(1)-Electric Characteristics:

A: Standard 2-Pin; **T**: Frequency Generation 3-Pin or more.

(2)-Function:

O: Automatic Restart & Locked Current Protection;

R: Rotate Detection Automatic Restart & Locked Current Protection;

W: Pulse Width Modulation & Automatic Restart & Locked Current Protection (PWM).

The spec is for reference only, it's subject to change without any prior notice

80x80x25mm IP5X series ③

Bearing Type	☑ 2 Ball	☐ Sleeve	☐ Rifle	☐ FDB
Speed Control	☑ Voltage	☐ Temperature	☑ PWM	
	☐ ±5% Speed tolerance		☑ ±10% Speed tolerance	
Frame Type	☑ 4 Screw	☑ 8 Screw		
Signal output	☑ Alarm Signal	☑ Tacho Signal		
Protection	☑ Lock	☑ Reverse	☐ Over Voltage	☐ Over heat
ESD ①	☐ Class Ⅰ	☐ Class Ⅱ	☑ Class Ⅲ	
Insulation ②	☑ Class A	☐ Class B	☐ Class C	☐ Class F
Safety	☑ UL	☑ TUV	☑ CE	☐ VDE
Motor type	☑ Uni-phase	☑ 2 phase	☐ 3 phase	

AIR FLOW/STATIC-PRESSURE

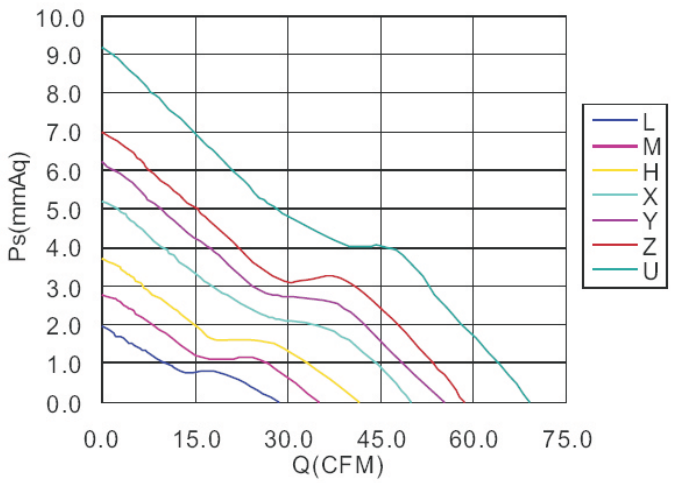

OUTLINE(mm)

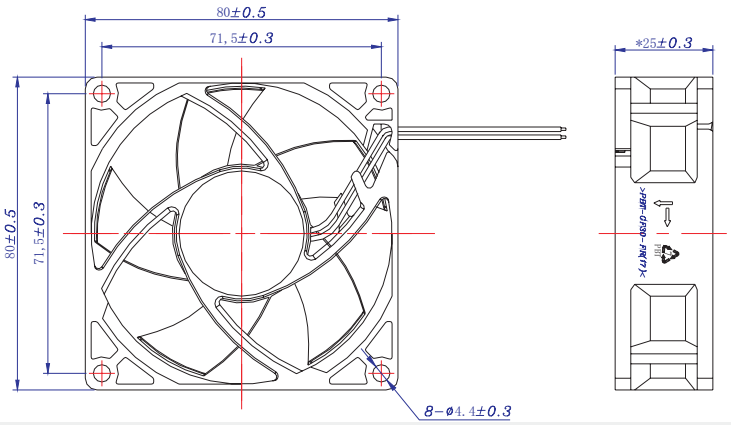

Note:

①-Reference standard: IEC 61000-4-2
②-Reference standard: UL 1446
③-Reference standard: IEC 60529

Item No.	Operating Voltage	Maximum Air Flow		Maximum Air Pressure		Speed	Rated Current	Input Power	Noise	Weight
	(V)	(CMM)	(CFM)	(mmAq)	(inchAq)	(rpm)	(A)	(W)	dB(A)	(g)
MG(1)8012LB-(2)25	12	0.806	28.46	1.98	0.078	2,100	0.12	1.44	23.1	90
MG(1)8012MB-(2)25	12	0.987	34.85	2.79	0.110	2,500	0.15	1.80	29.0	90
MG(1)8012HB-(2)25	12	1.171	41.34	3.71	0.146	3,000	0.24	2.88	33.2	90
MG(1)8012XB-(2)25	12	1.413	49.89	5.19	0.204	3,600	0.39	4.68	37.3	90
MG(1)8012YB-(2)25	12	1.562	55.13	6.21	0.244	3,900	0.42	5.04	39.2	90
MG(1)8012ZB-(2)25	12	1.653	58.35	7.00	0.276	4,200	0.54	6.48	42.3	90
MG(1)8012UB-(2)25	12	1.951	68.88	9.17	0.361	4,800	0.66	7.92	45.2	90
MG(1)8024LB-(2)25	24	0.806	28.46	1.98	0.078	2,100	0.09	2.16	23.1	90
MG(1)8024MB-(2)25	24	0.987	34.85	2.79	0.110	2,500	0.11	2.64	29.0	90
MG(1)8024HB-(2)25	24	1.171	41.34	3.71	0.146	3,000	0.16	3.84	33.2	90
MG(1)8024XB-(2)25	24	1.413	49.89	5.19	0.204	3,600	0.23	5.52	37.3	90
MG(1)8024YB-(2)25	24	1.562	55.13	6.21	0.244	3,900	0.26	6.24	39.2	90
MG(1)8024ZB-(2)25	24	1.653	58.35	7.00	0.276	4,200	0.30	7.20	42.3	90
MG(1)8024UB-(2)25	24	1.951	68.88	9.17	0.361	4,800	0.48	11.52	45.2	90

Remarks:

(1)-Electric Characteristics:

A: Standard 2-Pin; **T**: Frequency Generation 3-Pin or more.

(2)-Function:

A: None Automatic Restart;
O: Automatic Restart & Locked Current Protection;
R: Rotate Detection Automatic Restart & Locked Current Protection;
S: Thermo-Control Speed, Automatic Restart & Locked Current Protection;
W: Pulse Width Modulation & Automatic Restart & Locked Current Protection (PWM).

The spec is for reference only, it's subject to change without any prior notice

80x80x25mm IPX5 series ③

Bearing Type	☑ 2 Ball	☐ Sleeve	☐ Rifle	☐ FDB
Speed Control	☑ Voltage	☐ Temperature	☑ PWM	
	☐ ±5% Speed tolerance		☑ ±10% Speed tolerance	
Frame Type	☑ 4 Screw	☑ 8 Screw		
Signal output	☑ Alarm Signal	☑ Tacho Signal		
Protection	☑ Lock	☑ Reverse	☐ Over Voltage	☐ Over heat
ESD ①	☐ Class Ⅰ	☐ Class Ⅱ	☑ Class Ⅲ	
Insulation ②	☑ Class A	☐ Class B	☐ Class C	☐ Class F
Safety	☑ UL	☑ TUV	☑ CE	☐ VDE
Motor type	☑ Uni-phase	☑ 2 phase	☐ 3 phase	

AIR FLOW/STATIC-PRESSURE

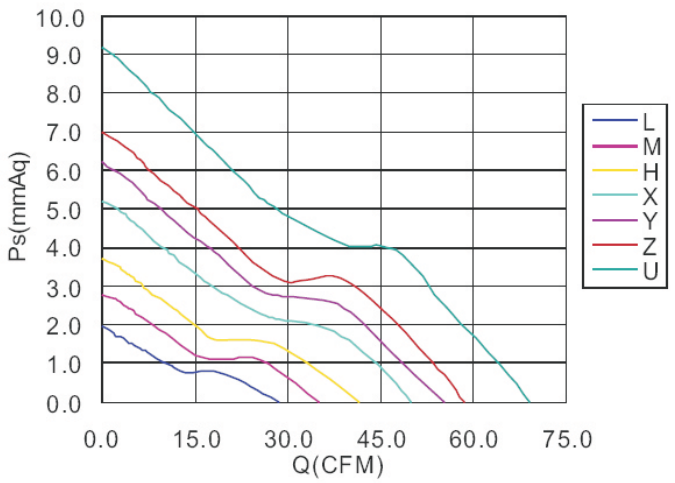

OUTLINE(mm)

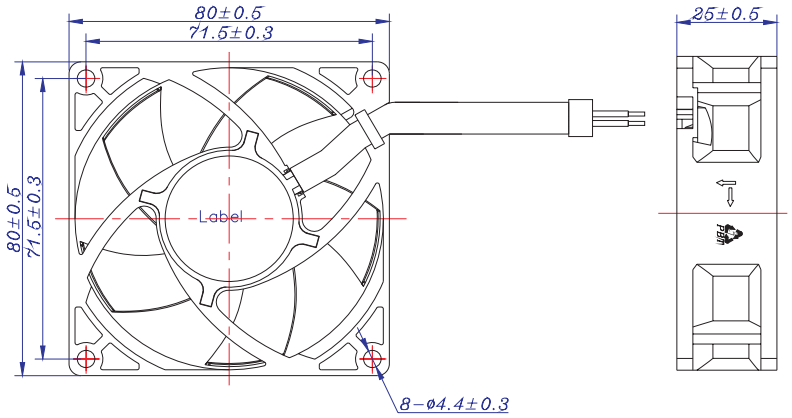

Note:

①-Reference standard: IEC 61000-4-2
②-Reference standard: UL 1446
③-Reference standard: IEC 60529

Item No.	Operating Voltage	Maximum Air Flow		Maximum Air Pressure		Speed	Rated Current	Input Power	Noise	Weight
	(V)	(CMM)	(CFM)	(mmAq)	(inchAq)	(rpm)	(A)	(W)	dB(A)	(g)
MG(1)8012LB-(2)25	12	0.806	28.46	1.98	0.078	2,100	0.12	1.44	23.1	90
MG(1)8012MB-(2)25	12	0.987	34.85	2.79	0.110	2,500	0.15	1.80	29.0	90
MG(1)8012HB-(2)25	12	1.171	41.34	3.71	0.146	3,000	0.24	2.88	33.2	90
MG(1)8012XB-(2)25	12	1.413	49.89	5.19	0.204	3,600	0.39	4.68	37.3	90
MG(1)8012YB-(2)25	12	1.562	55.13	6.21	0.244	3,900	0.42	5.04	39.2	90
MG(1)8012ZB-(2)25	12	1.653	58.35	7.00	0.276	4,200	0.54	6.48	42.3	90
MG(1)8012UB-(2)25	12	1.951	68.88	9.17	0.361	4,800	0.66	7.92	45.2	90
MG(1)8024LB-(2)25	24	0.806	28.46	1.98	0.078	2,100	0.09	2.16	23.1	90
MG(1)8024MB-(2)25	24	0.987	34.85	2.79	0.110	2,500	0.11	2.64	29.0	90
MG(1)8024HB-(2)25	24	1.171	41.34	3.71	0.146	3,000	0.16	3.84	33.2	90
MG(1)8024XB-(2)25	24	1.413	49.89	5.19	0.204	3,600	0.23	5.52	37.3	90
MG(1)8024YB-(2)25	24	1.562	55.13	6.21	0.244	3,900	0.26	6.24	39.2	90
MG(1)8024ZB-(2)25	24	1.653	58.35	7.00	0.276	4,200	0.30	7.20	42.3	90
MG(1)8024UB-(2)25	24	1.951	68.88	9.17	0.361	4,800	0.48	11.52	45.2	90

Remarks:

(1)-Electric Characteristics:

A: Standard 2-Pin; **T**: Frequency Generation 3-Pin or more.

(2)-Function:

O: Automatic Restart & Locked Current Protection;

R: Rotate Detection Automatic Restart & Locked Current Protection;

W: Pulse Width Modulation & Automatic Restart & Locked Current Protection (PWM).

The spec is for reference only, it's subject to change without any prior notice

92x92x25mm IP5X series ③

Bearing Type	☑ 2 Ball	☐ Sleeve	☐ Rifle	☐ FDB
Speed Control	☑ Voltage	☐ Temperature	☑ PWM	
	☐ ±5% Speed tolerance		☑ ±10% Speed tolerance	
Frame Type	☑ 4 Screw	☑ 8 Screw		
Signal output	☑ Alarm Signal	☑ Tacho Signal		
Protection	☑ Lock	☑ Reverse	☐ Over Voltage	☐ Over heat
ESD ①	☐ Class Ⅰ	☐ Class Ⅱ	☑ Class Ⅲ	
Insulation ②	☑ Class A	☐ Class B	☐ Class C	☐ Class F
Safety	☑ UL	☑ TUV	☑ CE	☐ VDE
Motor type	☑ Uni-phase	☑ 2 phase	☐ 3 phase	

AIR FLOW/STATIC-PRESSURE

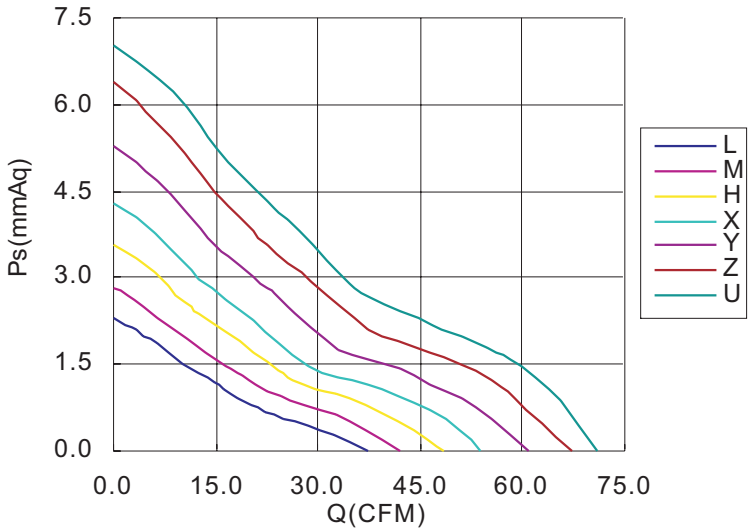

OUTLINE(mm)

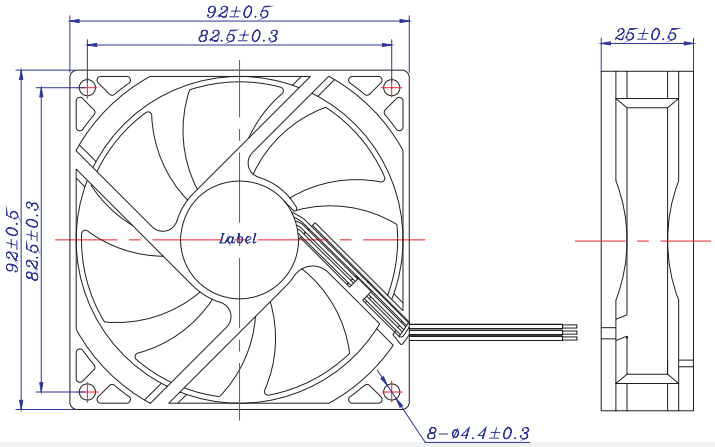

Note:

①-Reference standard: IEC 61000-4-2
②-Reference standard: UL 1446
③-Reference standard: IEC 60529

Item No.	Operating Voltage	Maximum Air Flow		Maximum Air Pressure		Speed	Rated Current	Input Power	Noise	Weight
	(V)	(CMM)	(CFM)	(mmAq)	(inchAq)	(rpm)	(A)	(W)	dB(A)	(g)
MG(1)9212LB-(2)25	12	1.061	37.44	2.32	0.091	2,100	0.15	1.80	30.4	95
MG(1)9212MB-(2)25	12	1.194	42.15	2.81	0.111	2,300	0.17	2.04	31.0	95
MG(1)9212HB-(2)25	12	1.369	48.32	3.58	0.141	2,600	0.25	3.00	33.7	95
MG(1)9212XB-(2)25	12	1.497	52.86	4.27	0.168	2,900	0.32	3.84	38.3	95
MG(1)9212YB-(2)25	12	1.728	60.99	5.26	0.207	3,200	0.41	4.92	40.4	95
MG(1)9212ZB-(2)25	12	1.939	68.46	6.40	0.252	3,600	0.47	5.64	43.1	95
MG(1)9212UB-(2)25	12	1.985	70.08	7.02	0.276	3,800	0.54	6.48	44.2	95
MG(1)9224LB-(2)25	24	1.061	37.44	2.32	0.091	2,100	0.12	2.88	30.4	95
MG(1)9224MB-(2)25	24	1.194	42.15	2.81	0.111	2,300	0.15	3.60	31.0	95
MG(1)9224HB-(2)25	24	1.369	48.32	3.58	0.141	2,600	0.19	4.56	33.7	95
MG(1)9224XB-(2)25	24	1.497	52.86	4.27	0.168	2,900	0.22	5.28	38.3	95
MG(1)9224YB-(2)25	24	1.728	60.99	5.26	0.207	3,200	0.27	6.48	40.4	95
MG(1)9224ZB-(2)25	24	1.939	68.46	6.40	0.252	3,600	0.40	9.60	43.1	95
MG(1)9224UB-(2)25	24	1.985	70.08	7.02	0.276	3,800	0.48	11.52	44.2	95

Remarks:

(1)-Electric Characteristics:

A: Standard 2-Pin; **T**: Frequency Generation 3-Pin or more.

(2)-Function:

A: None Automatic Restart;
O: Automatic Restart & Locked Current Protection;
R: Rotate Detection Automatic Restart & Locked Current Protection;
S: Thermo-Control Speed, Automatic Restart & Locked Current Protection;
W: Pulse Width Modulation & Automatic Restart & Locked Current Protection (PWM).

The spec is for reference only, it's subject to change without any prior notice

92x92x32mm IP68 series ③

Bearing Type	☑ 2 Ball	☐ Sleeve	☐ Rifle	☐ FDB
Speed Control	☑ Voltage	☐ Temperature	☑ PWM	
	☐ ±5% Speed tolerance		☑ ±10% Speed tolerance	
Frame Type	☐ 4 Screw	☑ 8 Screw		
Signal output	☑ Alarm Signal	☑ Tacho Signal		
Protection	☑ Lock	☑ Reverse	☐ Over Voltage	☐ Over heat
ESD ①	☐ Class Ⅰ	☐ Class Ⅱ	☑ Class Ⅲ	
Insulation ②	☑ Class A	☐ Class B	☐ Class C	☐ Class F
Safety	☑ UL	☑ TUV	☑ CE	☐ VDE
Motor type	☑ Uni-phase	☑ 2 phase	☐ 3 phase	

AIR FLOW/STATIC-PRESSURE

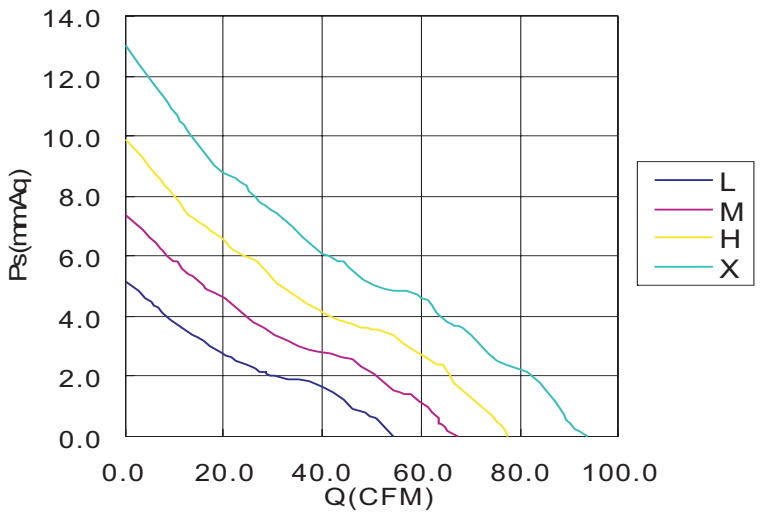

OUTLINE(mm)

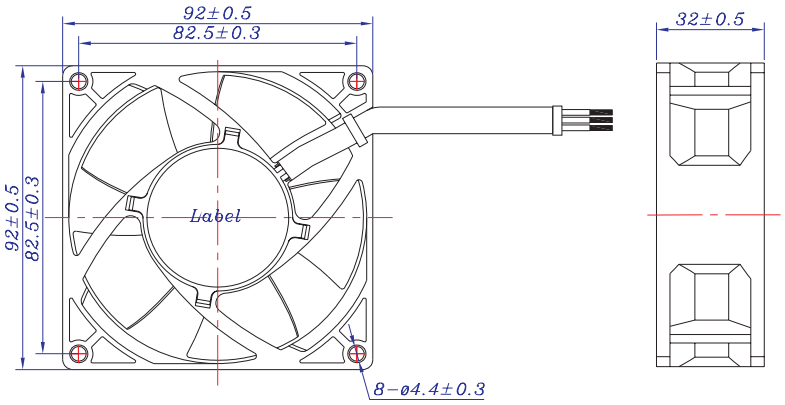

Note:

①-Reference standard: IEC 61000-4-2
②-Reference standard: UL 1446
③-Reference standard: IEC 60529

Item No.	Operating Voltage	Maximum Air Flow		Maximum Air Pressure		Speed	Rated Current	Input Power	Noise	Weight
	(V)	(CMM)	(CFM)	(mmAq)	(inchAq)	(rpm)	(A)	(W)	dB(A)	(g)
MG(1)9212LB-(2)32	12	1.542	54.43	5.15	0.203	3,000	0.20	2.40	36.5	168
MG(1)9212MB-(2)32	12	1.909	67.38	7.39	0.291	3,600	0.42	5.04	41.0	168
MG(1)9212HB-(2)32	12	2.203	77.78	9.85	0.388	4,200	0.68	8.16	46.6	168
MG(1)9212XB-(2)32	12	2.650	93.55	13.00	0.512	4,800	1.00	12.00	50.6	168
MG(1)9224LB-(2)32	24	1.542	54.43	5.15	0.203	3,000	0.12	2.88	36.5	168
MG(1)9224MB-(2)32	24	1.909	67.38	7.39	0.291	3,600	0.21	5.04	41.0	168
MG(1)9224HB-(2)32	24	2.203	77.78	9.85	0.388	4,200	0.30	7.20	46.6	168
MG(1)9224XB-(2)32	24	2.650	93.55	13.00	0.512	4,800	0.45	10.80	50.6	168

Remarks:

(1)-Electric Characteristics:

A: Standard 2-Pin; **T**: Frequency Generation 3-Pin or more.

(2)-Function:

O: Automatic Restart & Locked Current Protection;

R: Rotate Detection Automatic Restart & Locked Current Protection;

W: Pulse Width Modulation & Automatic Restart & Locked Current Protection (PWM).

The spec is for reference only, it's subject to change without any prior notice

92x92x32mm IP55 series ③

Bearing Type	☑ 2 Ball	☐ Sleeve	☐ Rifle	☐ FDB
Speed Control	☑ Voltage	☐ Temperature	☑ PWM	
	☐ ±5% Speed tolerance		☑ ±10% Speed tolerance	
Frame Type	☐ 4 Screw	☑ 8 Screw		
Signal output	☑ Alarm Signal	☑ Tacho Signal		
Protection	☑ Lock	☑ Reverse	☐ Over Voltage	☐ Over heat
ESD ①	☐ Class Ⅰ	☐ Class Ⅱ	☑ Class Ⅲ	
Insulation ②	☑ Class A	☐ Class B	☐ Class C	☐ Class F
Safety	☑ UL	☑ TUV	☑ CE	☐ VDE
Motor type	☑ Uni-phase	☑ 2 phase	☐ 3 phase	

AIR FLOW/STATIC-PRESSURE

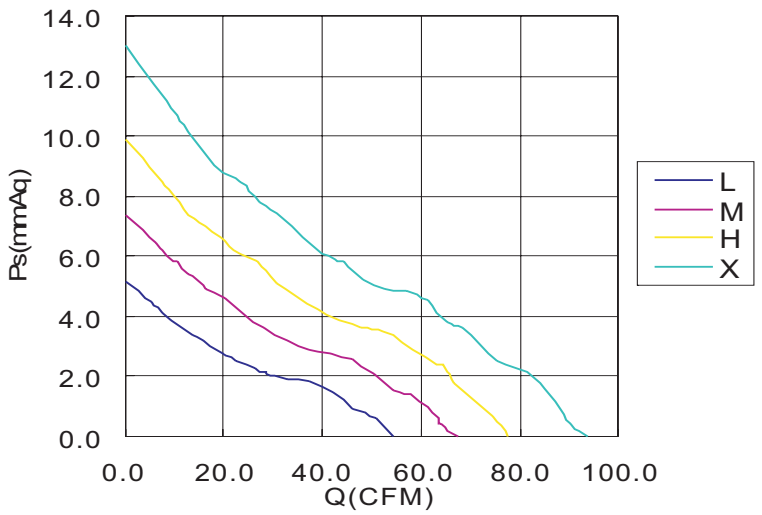

OUTLINE(mm)

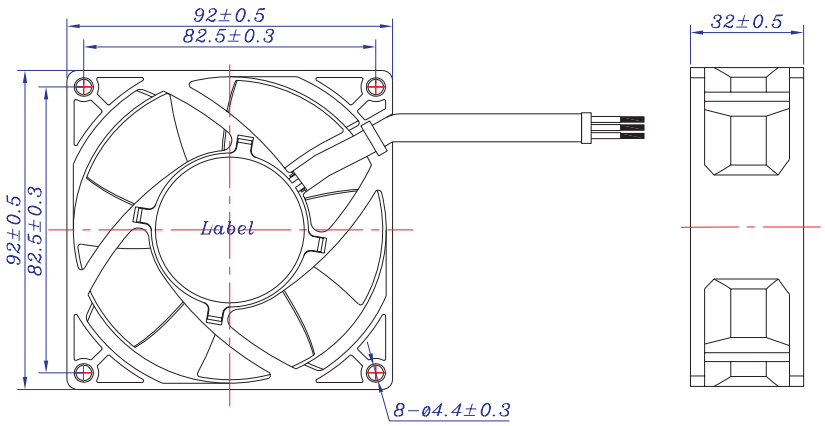

Note:

①-Reference standard: IEC 61000-4-2
②-Reference standard: UL 1446
③-Reference standard: IEC 60529

Item No.	Operating Voltage	Maximum Air Flow		Maximum Air Pressure		Speed	Rated Current	Input Power	Noise	Weight
	(V)	(CMM)	(CFM)	(mmAq)	(inchAq)	(rpm)	(A)	(W)	dB(A)	(g)
MG(1)9212LB-(2)32	12	1.542	54.43	5.15	0.203	3,000	0.20	2.40	36.5	168
MG(1)9212MB-(2)32	12	1.909	67.38	7.39	0.291	3,600	0.42	5.04	41.0	168
MG(1)9212HB-(2)32	12	2.203	77.78	9.85	0.388	4,200	0.68	8.16	46.6	168
MG(1)9212XB-(2)32	12	2.650	93.55	13.00	0.512	4,800	1.00	12.00	50.6	168
MG(1)9224LB-(2)32	24	1.542	54.43	5.15	0.203	3,000	0.12	2.88	36.5	168
MG(1)9224MB-(2)32	24	1.909	67.38	7.39	0.291	3,600	0.21	5.04	41.0	168
MG(1)9224HB-(2)32	24	2.203	77.78	9.85	0.388	4,200	0.30	7.20	46.6	168
MG(1)9224XB-(2)32	24	2.650	93.55	13.00	0.512	4,800	0.45	10.80	50.6	168

Remarks:

(1)-Electric Characteristics:

A: Standard 2-Pin; **T**: Frequency Generation 3-Pin or more.

(2)-Function:

O: Automatic Restart & Locked Current Protection;

R: Rotate Detection Automatic Restart & Locked Current Protection;

W: Pulse Width Modulation & Automatic Restart & Locked Current Protection (PWM).

The spec is for reference only, it's subject to change without any prior notice

92x92x32mm IPX5 series ③

Bearing Type	☑ 2 Ball	☐ Sleeve	☐ Rifle	☐ FDB
Speed Control	☑ Voltage	☐ Temperature	☑ PWM	
	☐ ±5% Speed tolerance		☑ ±10% Speed tolerance	
Frame Type	☐ 4 Screw	☑ 8 Screw		
Signal output	☑ Alarm Signal	☑ Tacho Signal		
Protection	☑ Lock	☑ Reverse	☐ Over Voltage	☐ Over heat
ESD ①	☐ Class Ⅰ	☐ Class Ⅱ	☑ Class Ⅲ	
Insulation ②	☑ Class A	☐ Class B	☐ Class C	☐ Class F
Safety	☑ UL	☑ TUV	☑ CE	☐ VDE
Motor type	☑ Uni-phase	☑ 2 phase	☐ 3 phase	

AIR FLOW/STATIC-PRESSURE

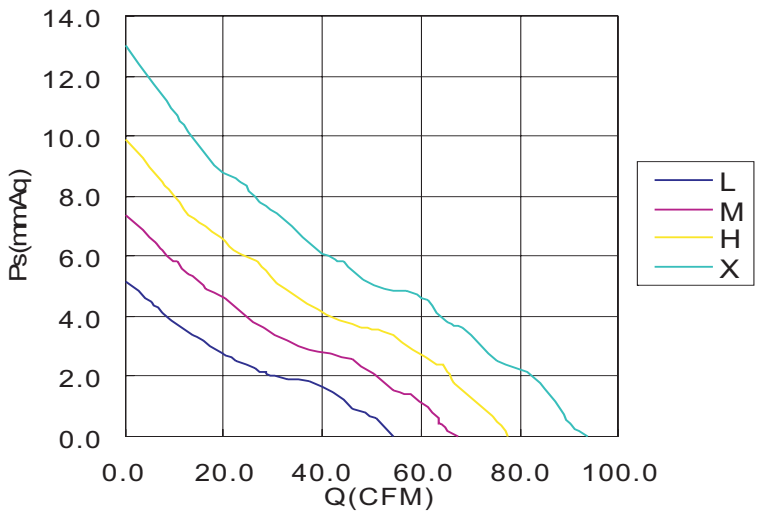

OUTLINE(mm)

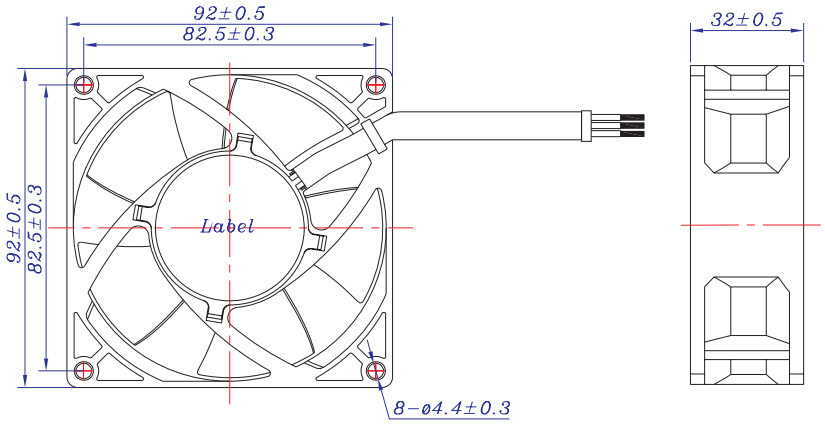

Note:

①-Reference standard: IEC 61000-4-2
②-Reference standard: UL 1446
③-Reference standard: IEC 60529

Item No.	Operating Voltage	Maximum Air Flow		Maximum Air Pressure		Speed	Rated Current	Input Power	Noise	Weight
	(V)	(CMM)	(CFM)	(mmAq)	(inchAq)	(rpm)	(A)	(W)	dB(A)	(g)
MG(1)9212LB-(2)32	12	1.542	54.43	5.15	0.203	3,000	0.20	2.40	36.5	168
MG(1)9212MB-(2)32	12	1.909	67.38	7.39	0.291	3,600	0.42	5.04	41.0	168
MG(1)9212HB-(2)32	12	2.203	77.78	9.85	0.388	4,200	0.68	8.16	46.6	168
MG(1)9212XB-(2)32	12	2.650	93.55	13.00	0.512	4,800	1.00	12.00	50.6	168
MG(1)9224LB-(2)32	24	1.542	54.43	5.15	0.203	3,000	0.12	2.88	36.5	168
MG(1)9224MB-(2)32	24	1.909	67.38	7.39	0.291	3,600	0.21	5.04	41.0	168
MG(1)9224HB-(2)32	24	2.203	77.78	9.85	0.388	4,200	0.30	7.20	46.6	168
MG(1)9224XB-(2)32	24	2.650	93.55	13.00	0.512	4,800	0.45	10.80	50.6	168

Remarks:

(1)-Electric Characteristics:

A: Standard 2-Pin; **T**: Frequency Generation 3-Pin or more.

(2)-Function:

O: Automatic Restart & Locked Current Protection;

R: Rotate Detection Automatic Restart & Locked Current Protection;

W: Pulse Width Modulation & Automatic Restart & Locked Current Protection (PWM).

The spec is for reference only, it's subject to change without any prior notice

120x120x38mm IP68 series ③

Bearing Type	☑ 2 Ball	☐ Sleeve	☐ Rifle	☐ FDB
Speed Control	☑ Voltage	☐ Temperature	☑ PWM	
	☑ ±5% Speed tolerance		☑ ±10% Speed tolerance	
Frame Type	☐ 4 Screw	☑ 8 Screw		
Signal output	☑ Alarm Signal	☑ Tacho Signal		
Protection	☑ Lock	☑ Reverse	☐ Over Voltage	☐ Over heat
ESD ①	☐ Class Ⅰ	☐ Class Ⅱ	☑ Class Ⅲ	
Insulation ②	☑ Class A	☐ Class B	☐ Class C	☐ Class F
Safety	☑ UL	☑ TUV	☑ CE	☐ VDE
Motor type	☑ Uni-phase	☐ 2 phase	☐ 3 phase	

AIR FLOW/STATIC-PRESSURE

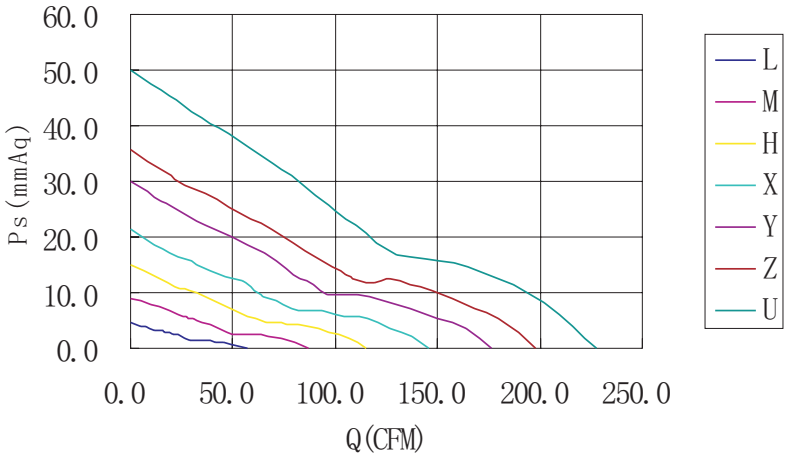

OUTLINE(mm)

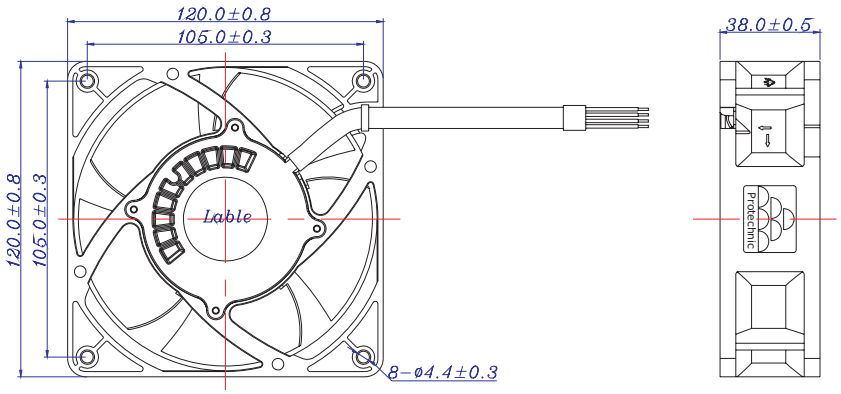

Note:

①-Reference standard: IEC 61000-4-2
②-Reference standard: UL 1446
③-Reference standard: IEC 60529

Item No.	Operating Voltage	Maximum Air Flow		Maximum Air Pressure		Speed	Rated Current	Input Power	Noise	Weight
	(V)	(CMM)	(CFM)	(mmAq)	(inchAq)	(rpm)	(A)	(W)	dB(A)	(g)
MG(1)12012LB-(2)38	12	1.612	56.91	4.49	0.177	2,000	0.45	5.40	36.0	415
MG(1)12012MB-(2)38	12	2.458	86.77	9.08	0.357	3,000	0.68	8.16	46.1	415
MG(1)12012HB-(2)38	12	3.255	114.91	15.07	0.593	4,000	0.86	10.32	54.5	415
MG(1)12012XB-(2)38	12	4.127	145.67	21.50	0.846	5,000	1.35	16.20	60.7	415
MG(1)12012YB-(2)38	12	5.001	176.53	29.90	1.177	6,000	2.10	25.20	64.9	415
MG(1)12024LB-(2)38	24	1.612	56.91	4.49	0.177	2,000	0.22	5.28	36.0	415
MG(1)12024MB-(2)38	24	2.458	86.77	9.08	0.357	3,000	0.34	8.16	46.1	415
MG(1)12024HB-(2)38	24	3.255	114.91	15.07	0.593	4,000	0.43	10.32	54.5	415
MG(1)12024XB-(2)38	24	4.127	145.67	21.50	0.846	5,000	0.70	16.80	60.7	415
MG(1)12024YB-(2)38	24	5.001	176.53	29.90	1.177	6,000	1.05	25.20	64.9	415
MG(1)12024ZB-(2)38	24	5.603	197.78	35.70	1.406	6,800	1.40	33.60	67.8	415
MG(1)12024UB-(2)38	24	6.459	228.00	50.00	1.969	7,500	1.75	42.00	70.0	415
MG(1)12048MB-(2)38	48	2.458	86.77	9.08	0.357	3,000	0.18	8.64	46.1	415
MG(1)12048HB-(2)38	48	3.255	114.91	15.07	0.593	4,000	0.26	12.48	54.5	415
MG(1)12048XB-(2)38	48	4.127	145.67	21.50	0.846	5,000	0.35	16.80	60.7	415
MG(1)12048YB-(2)38	48	5.001	176.53	29.90	1.177	6,000	0.43	20.64	64.9	415
MG(1)12048ZB-(2)38	48	5.603	197.78	35.70	1.406	6,800	0.60	28.80	67.8	415
MG(1)12048UB-(2)38	48	6.459	228.00	50.00	1.969	7,500	0.85	40.80	70.0	415

Remarks:

(1)-Electric Characteristics:

A: Standard 2-Pin; **T**: Frequency Generation 3-Pin or more.

(2)-Function:

O: Automatic Restart & Locked Current Protection;

R: Rotate Detection Automatic Restart & Locked Current Protection;

W: Pulse Width Modulation & Automatic Restart & Locked Current Protection (PWM).

The spec is for reference only, it's subject to change without any prior notice

172x172x50.8mm IP68 series ③

Bearing Type	☑ 2 Ball	☐ Sleeve	☐ Rifle	☐ FDB
Speed Control	☑ Voltage	☐ Temperature	☑ PWM	
	☑ ±5% Speed tolerance		☑ ±10% Speed tolerance	
Frame Type	☐ 4 Screw	☑ 8 Screw		
Signal output	☑ Alarm Signal	☑ Tacho Signal		
Protection	☑ Lock	☑ Reverse	☐ Over Voltage	☐ Over heat
ESD ①	☐ Class Ⅰ	☐ Class Ⅱ	☑ Class Ⅲ	
Insulation ②	☑ Class A	☐ Class B	☐ Class C	☐ Class F
Safety	☑ UL	☑ TUV	☑ CE	☐ VDE
Motor type	☑ Uni-phase	☐ 2 phase	☐ 3 phase	

AIR FLOW/STATIC-PRESSURE

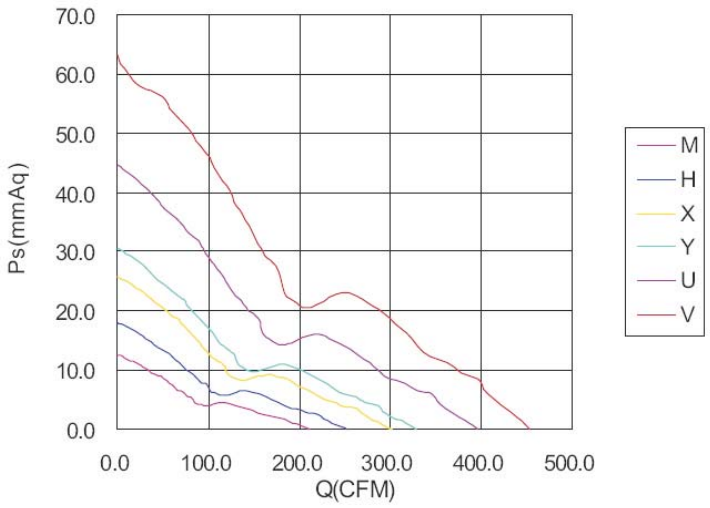

OUTLINE(mm)

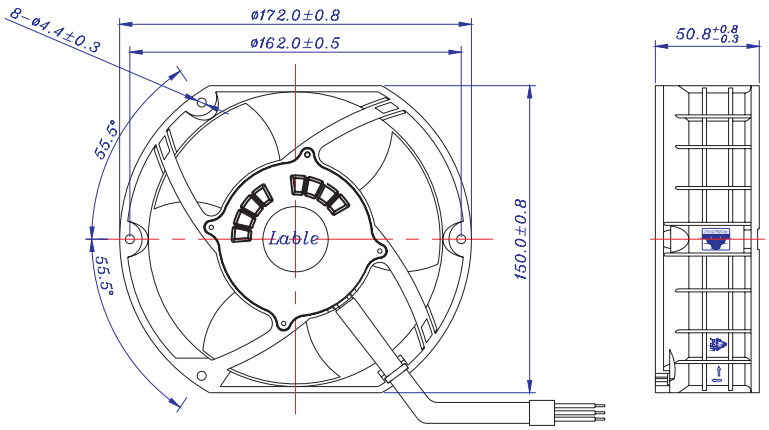

Note:

①-Reference standard: IEC 61000-4-2
②-Reference standard: UL 1446
③-Reference standard: IEC 60529

Item No.	Operating Voltage	Maximum Air Flow		Maximum Air Pressure		Speed	Rated Current	Input Power	Noise	Weight
	(V)	(CMM)	(CFM)	(mmAq)	(inchAq)	(rpm)	(A)	(W)	dB(A)	(g)
MG(1)1712MB-(2)51	12	5.942	209.70	12.50	0.495	2,800	0.79	9.48	50.0	780
MG(1)1712HB-(2)51	12	7.110	251.00	18.00	0.709	3,350	1.32	15.84	55.0	780
MG(1)1712XB-(2)51	12	8.498	299.70	25.60	1.010	4,000	2.10	25.20	60.0	780
MG(1)1712YB-(2)51	12	9.230	325.00	30.30	1.194	4,350	3.80	44.16	63.5	780
MG(1)1712UB-(2)51	12	11.140	393.30	44.20	1.740	5,250	5.00	67.20	69.0	780
MG(1)1724MB-(2)51	24	5.942	209.70	12.50	0.495	2,800	0.39	9.36	50.0	780
MG(1)1724HB-(2)51	24	7.110	251.00	18.00	0.709	3,350	0.66	15.84	55.0	780
MG(1)1724XB-(2)51	24	8.489	299.70	25.60	1.010	4,000	1.00	24.00	60.0	780
MG(1)1724YB-(2)51	24	9.230	325.00	30.30	1.194	4,350	2.00	44.16	63.5	780
MG(1)1724UB-(2)51	24	11.140	393.30	44.20	1.740	5,250	3.00	67.20	69.0	780
MG(1)1724VB-(2)51	24	12.796	451.70	62.80	2.472	6,300	4.00	96.00	73.0	780
MG(1)1748HB-(2)51	48	7.110	251.00	18.00	0.709	3,350	0.52	24.96	55.0	780
MG(1)1748XB-(2)51	48	8.498	299.70	25.60	1.010	4,000	0.73	35.04	60.0	780
MG(1)1748YB-(2)51	48	9.230	325.00	30.30	1.194	4,350	0.92	44.16	63.5	780
MG(1)1748UB-(2)51	48	11.140	393.30	44.20	1.740	5,250	1.40	67.20	69.0	780
MG(1)1748VB-(2)51	48	12.796	451.70	62.80	2.472	6,300	2.30	110.40	73.0	780

Remarks:

(1)-Electric Characteristics:

A: Standard 2-Pin; **T**: Frequency Generation 3-Pin or more.

(2)-Function:

O: Automatic Restart & Locked Current Protection;

R: Rotate Detection Automatic Restart & Locked Current Protection;

W: Pulse Width Modulation & Automatic Restart & Locked Current Protection (PWM).

The spec is for reference only, it's subject to change without any prior notice

PROTECHNIC ELECTRIC CO.,LTD

東莞工廠
Dongguan Factory
東莞永立電機有限公司
Dongguan Protechnic Electric Co.,Ltd.
Tel:86-769-83306898
Fax:86-769-83306889
E-mail:protech@rotechnic.com
Http://www.protechnic.us

美國公司
USA Office
美國永立電機有限公司
Protechnic International Co.,Ltd.
Tel:510-360-9630
Fax:510-440-8117

上海工廠
Shanghai Factory
廣泰電機(吳江)有限公司
Protechnic Electric(Wujiang) Co.,Ltd.
Tel:86-512-63327378
Fax:86-512-63327229

台灣公司
Taiwan Office
矩冠貿易有限公司
Protechnic Electric Co., Ltd.
Tel:886-3-5532799
Fax:886-3-5532949